NO. 28 NOTES FROM THE SHOP $2.50

Woodsmith®

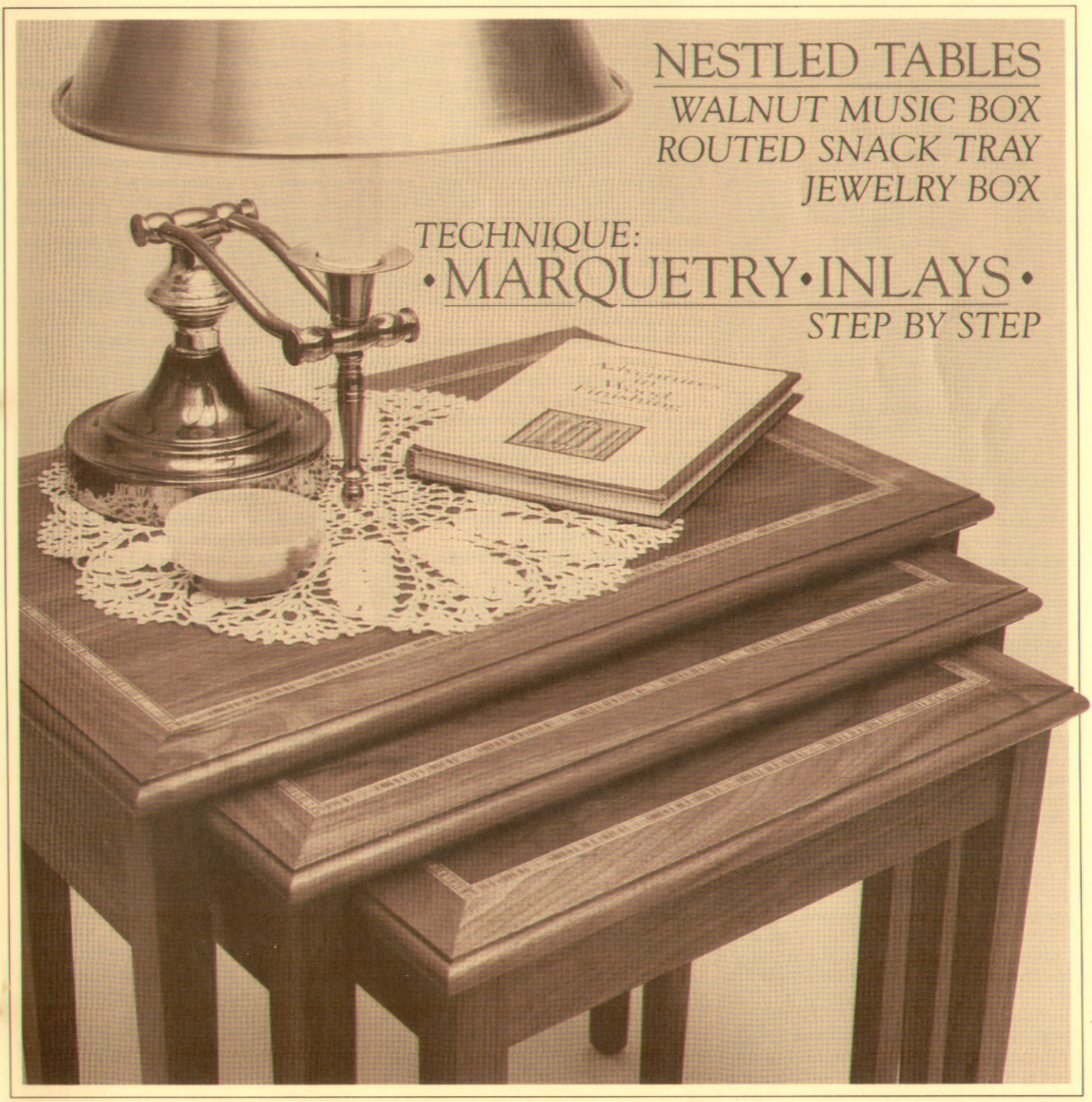

NESTLED TABLES

WALNUT MUSIC BOX
ROUTED SNACK TRAY
JEWELRY BOX

TECHNIQUE:
•MARQUETRY•INLAYS•
STEP BY STEP

Woodsmith®

Number 28 July/Aug., 1983

Editor
Donald B. Peschke

Design Director
Ted Kralicek

Assistant Editors
Steve Krohmer
Michael P. Scott

Graphic Designers
David Kreyling
Marcia Simmons

Subscription Manager
Sandy J. Baum

Subscription Assistants
Christel Miner
Vicky Robinson
Jackie Stroud
Shirley Feltman
Pam Dickey

Computer Operations
Ken Miner

Circulation Manager
Jeff Farris

Administrative Assistant
Cheryl Scott

ISSN: 0164-4114

WOODSMITH is published bimonthly (January, March, May, July, September, November) by Woodsmith Publishing Company, 1912 Grand Ave., Des Moines, Iowa 50309.
WOODSMITH is a registered trademark of the Woodsmith Publishing Company.
©**Copyright 1983** by Woodsmith Publishing Company. All Rights Reserved.
Subscriptions: One year (6 issues) $10, Two years (12 issues) $18. Single copy price, $2.50 (Canada and Foreign: add $2 per year.)
Change Of Address: Please be sure to include both your old and new address for change of address. Mail to: Woodsmith, 1912 Grand Ave., Des Moines, Iowa 50309.
Second class postage paid at Des Moines, Iowa.
Postmaster: Send change of address notice, Form 3579, to Woodsmith Publishing Co., 1912 Grand Ave., Des Moines, Iowa 50309.

BACK ISSUES

A list of the contents of all back issues appears on the wrapper of this issue. If the wrapper is missing, you can send for a booklet describing the contents and prices of all back issues.

SAMPLE COPIES

If you have a friend who would like to see a copy of **Woodsmith**, just send the name and address, and we'll send a sample (at no cost).

Sawdust

ABOUT THIS ISSUE. Four years ago I met Rob Bolson at a local craft's fair. Rob is one of those rare breed who makes his living at woodworking in a one-man shop. This of course, requires a unique product — one that very few other woodworkers can make, or one that is made in such a way to set it apart from the crowd.

What Rob makes is small boxes. Some are band-sawn boxes, others routed, and others are . . . well, I'm not really sure how they're made. And that's why he's able to make a living at woodworking.

Although there are a lot of designs for small boxes, Rob's stand out because of his unique design approach. He was a geology major in college and bases some of his designs on the patterns of nature.

Anyway, to get to the point of all this, each year I run into Rob at the craft's fair, and each year we discuss the techniques and details of this type of woodworking. I always promise that someday I'll stop talking about these boxes, and get back in the shop to build one.

When the tip on a pin routing attachment came in (see page 20), it was the perfect opportunity (and technique) to try my hand at a routed box — something along the lines of what Rob makes, but not quite as intricate or involved.

What I discovered is that pin routing places many limitations on the design of a project. But if you can get the right design, pin routing offers some very unique and interesting possibilities.

The key to all of this is, of course, the pin router itself. Shopsmith sells a pin router for about $600, and Sears has one for about $200. However, with the help of one of our readers (Carl Dykman) we were able to add a pin routing set-up to the *Woodsmith* router table for about $5 (which was more agreeable to my wallet).

Of course, to use this pin router attachment, you have to build the router table first. But I have to say that this router table has proved itself valuable (over and over again) in our shop. The pin routing set-up is one more (inexpensive) addition that makes it well worth building.

DETAILS. "Attention to detail." Those words have been echoing in my head ever since I was a small boy. My father was a stickler for detail, and was prone to offer those words of advice whenever he had the chance.

I spent much of my young life trying to avoid details — adopting a somewhat haphazard approach to things. This of course, led to numerous mistakes and miscalculations. "But mistakes are part of being human," I reasoned. And I was determined to be as "human" as possible.

It wasn't until I wanted to build a "really nice woodworking project" that I finally learned that "attention to detail" and mistakes are two different things.

I have continued to make mistakes, but now I pay attention to them. If a joint doesn't fit quite right, I cut it again. If a project isn't square, I do whatever it takes to correct it.

The "nestled" tables (shown on page 12) are a classic example. In this case, the detail has to do with one of the most basic tenents of woodworking: making sure the assembly is square.

If the legs on all three tables are not perfectly square, it will be readily apparent when they're "nestled" together. If the mitered frames for the table tops are not cut right on the money, the whole project will suffer. This is the kind of detail that commands considerable attention . . . right from the start.

The same holds true for mounting marquetry inlays to a project. The oval inlay on the lid of the music box (see page 4) require hair-splitting detail. Without this kind of detail, the inlay will certainly attract the wrong kind of attention.

I've finally realized that attention to detail means recognizing the mistake and taking the extra step to correct it.

CORRECTION. In the last issue of *Woodsmith* (No. 27) we ran a lengthy article on how to chose a carbide-tipped saw blade. Unfortunately, one part of it may have been a little difficult to read because some of the text was apparently missing.

It's all there, it's just in the wrong place. I'm referring to page 20, the third column. The last 17 lines of text at the bottom of this column should be at the top of the column.

NEW FACES. Also in the last issue I mentioned that Jeff Farris (our new circulation manager) promised to increase our circulation by at least one new subscriber. He did. Or, at least he was there when it happened . . . Marilyn gave birth to a baby girl.

NEW BINDER. Recently we ordered a new supply of *Woodsmith* binders, and asked the company that makes them to add two new features. The binders now have pockets on the inside of each cover (for storing notes and sketches). The new binders also have some plastic things called "sheet lifters" that help keep the issues from binding on the rings as the binder is opened and closed.

NEXT MAILING. The next issue of *Woodsmith* will be mailed out during the week of October 3, 1983.

Tips & Techniques

HOME-MADE DOGS

The bench vise I have in my basement shop isn't equipped with one of the adjustable dogs commonly found on more expensive bench vises. As a result, I've had to wrestle with C-clamps whenever I wanted to hold a board flat across the bench top for planing, routing, sanding, etc.

Finally, I came up with an adjustable "dog" that can be used with any common vise. The beauty of this dog is that it can be raised, lowered, or removed when necessary. And, it's 8 inches wide — which provides a better gripping surface for clamping boards than the usual 1" wide dogs found on most European benches.

The vise dog is nothing more than a simple four sided box that's cut to fit over the movable face of the vise. The model I

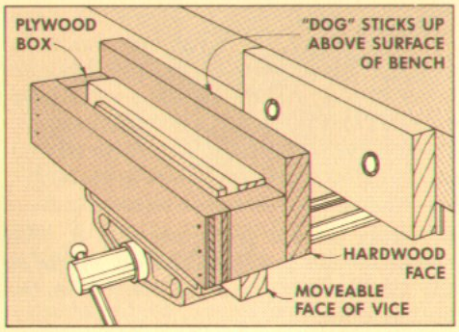

constructed (it takes all of about 5 minutes to make) was made using ½" plywood for the sides, and a piece of ½" hardwood for the face.

Robert Spalter
Rockville, Maryland

AN EARLY AMERICAN FINISH

Since I'm an early riser, I save all of my finishing work (like painting, varnishing, etc.) for the earliest morning hours. Working at this time of day has its advantages. Not only is it quiet (so that the noise of the household doesn't disturb my concentration), but more important, all of the dust from the previous day's work has had time to settle. This helps make my finishing about as dust free as possible.

Norm C. Friedman
Jupiter, Florida

CLAMPING COMBINATIONS

Recently, I ran into a problem while clamping the legs of an old-fashioned quilt rack to the turned uprights. Because of the curved shape of the legs, there was no place to anchor the clamps when it came time to glue everything together.

After several unsuccessful attempts, I hit on an idea of using a combination of hand screws and pipe clamps. First I put a hand screw on each leg. Then I used the parallel surfaces of the hand screws as seats for anchoring the pipe clamps.

This combination not only works great

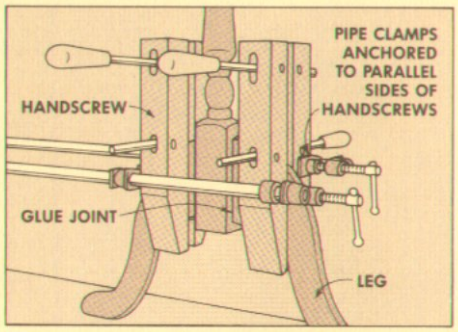

for this particular application, but it can also be used for other unusual clamping situations.

Jerry Pfleeger
Friendswood, Texas

Editor's Note: Jerry's method of using both hand screws and pipe clamps to hold pieces together works best when everything else has gone right. But, if the pieces have to be "encouraged" to come together, the hand screws will start slipping before enough pressure can be applied with the pipe clamps to pull everything together.

SIMPLIFIED CUT-OFFS

As I was making the Storage Cabinet in *Woodsmith* No. 25, I found that using the panel cut-off jig as recommended was more

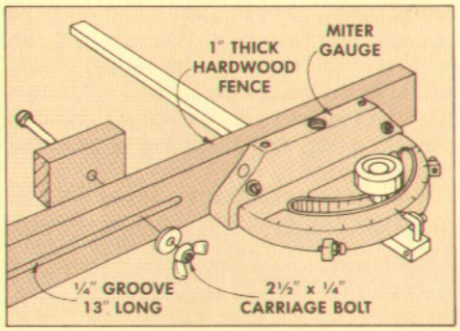

than a little bit awkward. And considering that there are 266 drawer pieces — plus all their dados — I decided there had to be a better way.

With cutting small pieces in mind, I devised a simple jig that worked very well and is easily managed for short, narrow pieces. The jig is a piece of hardwood with a movable stop block that's attached to the miter gauge.

I used 1" stock for both pieces to give the jig enough rigidity to maintain accuracy. The length of the fence I used was 20" to accommodate the longest piece used in the storage cabinet (15¼").

The ¼"-wide slot in the fence is 13" long, and was cut using a router and a ¼" straight bit. Then I drilled a stop block for a 2½"x¼" carriage bolt and wing nut (for quick adjustments). Finally, I screwed the assembly to the miter gauge.

Floyd Lee
Indianapolis, Indiana

TENON JIG CLAMP

Recently I made the jewelry case that was shown in *Woodsmith* No. 25, and now I'm using it to store all of my special tools. As I was making the case, I found that by sim-

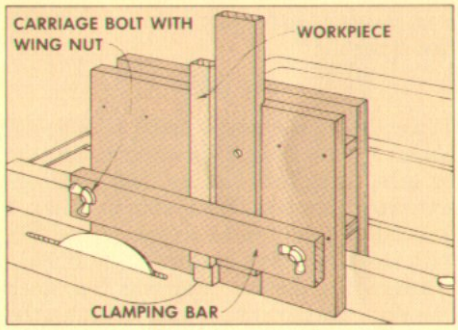

ply adding a clamping bar, the tenon cutting jig became much easier to use for repetitive cuts.

The clamping bar is just a piece of 2"-wide hardwood that's as long as the jig itself. To attach the clamping bar to the jig, I used 5" long carriage bolts and wing nuts.

Whenever the jig is used to cut more than just one tenon (or mortise in the case of the Jewelry Case), the only set up requirements are that the far bolt on the clamp arm must be adjusted to the thickness of the piece being cut. Then from this point on, each work piece can be secured by using only the closest bolt.

O. L. Williams
Lincoln, Nebraska

SEND IN YOUR IDEAS

If you'd like to share a woodworking tip with other readers of *Woodsmith*, send your idea to: *Woodsmith*, Tips & Techniques, 1912 Grand Ave., Des Moines, Iowa 50309.

We pay a minimum of $10 for tips, and $15 or more for special techniques (that are accepted for publication). Please give a complete explanation of your idea. If a sketch is needed, send it along; we'll draw a new one.

Music Box

MUSICAL NOTES FROM THE SHOP

Music boxes hold a special place in my heart. I think it stems from when I was young and my mom had a small music box on her dresser. It was pure delight to hear those musical charms each time she opened the lid. Over the years, we've lost track of that music box, so I finally decided to build a new one to replace it.

Once I decided to build a music box, I realized that the first step was to purchase the musical movement. (For information on where to order musical movements, see Sources, page 24.) This way, the size of the music compartment could be adjusted to provide proper clearance for the movement. Also, since there's a wide variety of start-stop levers on musical movements, the construction of the box, to some extent, depends on the method used to mount this lever.

THE BOX

Typically, music boxes have a delicate, almost ornate look. This effect is created by using very thin lumber, and moldings wherever possible. With this in mind, I decided to build the basic part of the box with stock that was resawn to ⅜" thick.

RESAWING. Before resawing the stock however, rough cut the front/back (A), the two sides (B) and the center divider (C) to 2" widths, and slightly longer than their finished lengths. Then resaw each of these five pieces to a thickness of 13/32", rather than ⅜". This thickness provides a little extra "meat" so the saw marks can be removed after resawing. (Shop Note: Resawing in this case is simply a matter of ripping each piece on edge.)

After the pieces are resawn and planed or sanded to the final thickness of ⅜", I trimmed the front/back (A) and sides (B) to their finished lengths. But rather than trimming the pieces to their finish widths, I kept them oversized (2") until after the corner joints were cut.

THE CORNERS. The front/back and sides of the box are joined with simple rabbet/dado joints. To make this joint, first cut a ⅛"-wide by 3/16"-deep dado on the front/back pieces, see Fig. 2. Then rabbets are cut on the ends of the side pieces leaving tongues that fit into the dado. (See *Woodsmith* No. 18 for a detailed description of making a dado/rabbet joint.)

THE CENTER DIVIDER. The music box has a center divider to create two compartments: one for the musical movement, and one for small nick-nacks or jewelry. After the corner joinery is complete, cut a ⅜" x 3/16" dado for the center divider in the center of the front and back pieces, see Fig. 1 (the width of this dado should match the actual thickness of the divider).

TRIM TO SIZE. At this point, the front/back and two sides (but not the center divider) can be trimmed to their final width of 1¾". Be sure to trim the excess width from the edge that will eventually become the top (exposed) edge in order to remove any chipout produced when the corner joints were cut.

GROOVES FOR GLASS. To protect the movement, I added a glass cover over the music compartment (⅛" Plexiglas also can be used — and is really a lot easier to work with). To mount the glass, cut a ⅛" groove (the thickness of single strength glass) in one end piece, and another groove in the center divider.

Both grooves are cut 1⅜" from the bottom edge of each piece, see Fig. 3. (The center divider is still a full 2" in width, so the measurement must be taken from the bottom edge.)

Next, trim the center divider flush with the top shoulder of the groove, see Fig. 3. This creates both a small rabbet for the glass to rest on, and a way to remove the glass to get to the movement.

Then I cut a small stop to hold the glass in place using the waste from the center divider. Later this stop will be attached with small brass brads to hold the glass in place, see Fig. 4.

ASSEMBLY. Now the basic box is almost ready to be assembled. But here's where you may have to alter these plans according to the way the start/stop lever of the particular movement you use is mounted to the box.

FIGURE 6

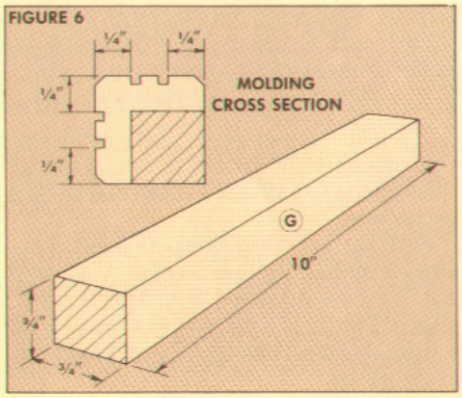

FIGURE 7

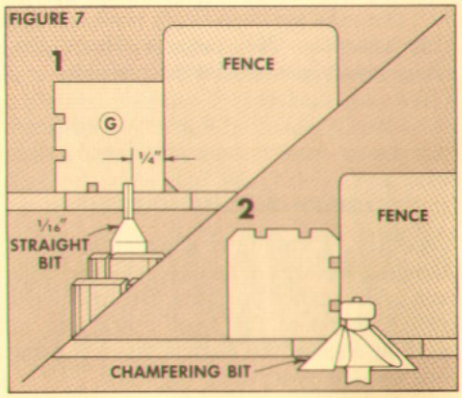

The movement I used called for a 7/16" x 1/16" deep groove to be cut in the side of the compartment that houses the movement, see Fig. 5. After cutting this groove, a slotted hole is drilled for the start/stop knob so that it's centered in the groove, 1⅜" from the back edge.

When the start/stop lever is fitted, dry-assemble the five pieces for the box and check the assembly for square. Then glue the five pieces together.

THE MOLDING

Now comes the molding pieces. These moldings give the box a kind of classic look — and they also hide the joint seams on the four corners.

The moldings on the front corners (G) are L-shaped pieces that wrap around the corner. Whereas the moldings on the back corners (H) are mounted only on the sides of the box to provide clearance at the back for the lid to open freely.

MOLDING BLANKS. To make these moldings, cut two pieces of ¾" x ¾" square stock 10" long, see Fig. 6. Although a piece of stock this long will produce more molding than is needed, it provides enough length to be handled safely.

GROOVES. Next, use a 1/16" straight bit (on the router table) to rout two grooves on two sides of one of the 10" pieces, routing each groove ¼" from the outside edge, see Fig. 7. On the other 10" piece, rout the grooves on only one side, see Fig. 9. After the grooves are cut, chamfer the outside corners of both pieces, see Figs. 7 and 9.

L-SHAPED MOLDING. To form the L-shaped molding (G), a rabbet is cut on the back side of the molding so that it can wrap around the outside corners of the music box. Cut the rabbet with two passes, setting the rip fence ¼" from the inside edge of the blade for the first cut, see Fig. 8.

For the second cut, simply flip the piece end for end, keeping one of the grooved faces of the molding exposed on the top, and the other grooved face butted against the fence.

To form the flat trim (H) that attaches to the sides of the box at the back corners, simply trim the remaining 10" piece of molding to ¼" thick, see Fig. 10.

FIGURE 1

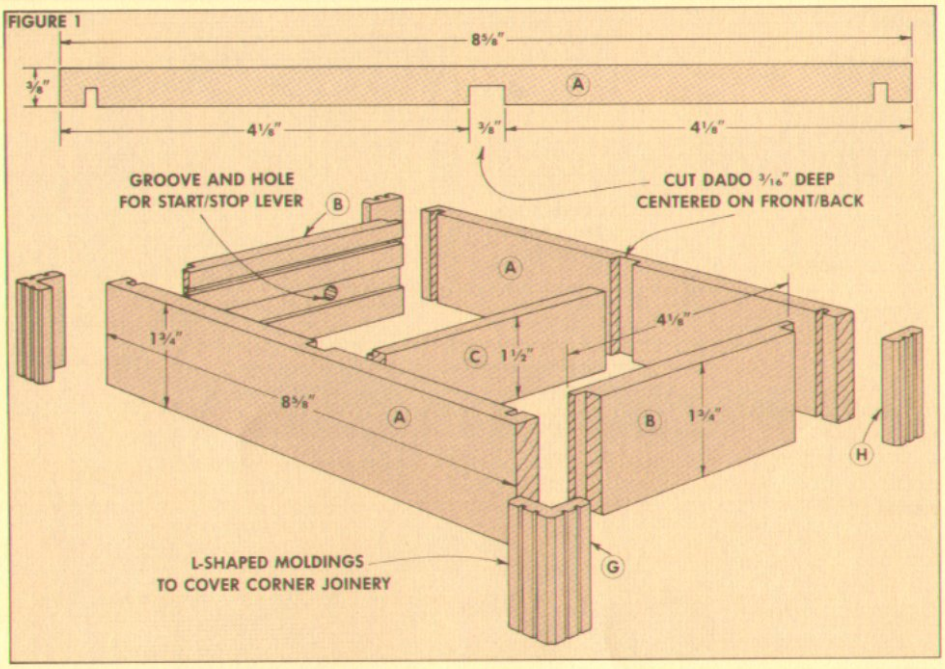

FIGURE 2

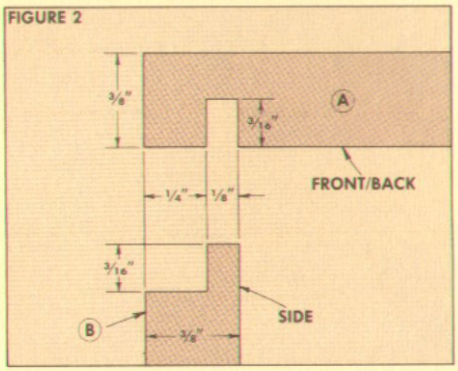

FIGURE 3

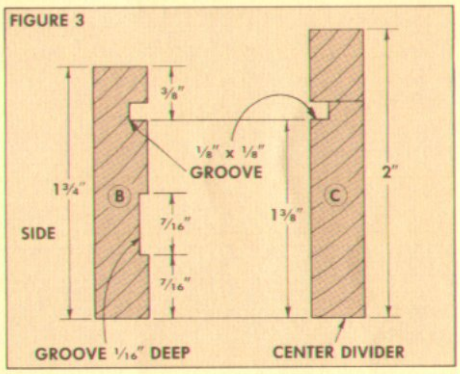

FIGURE 4

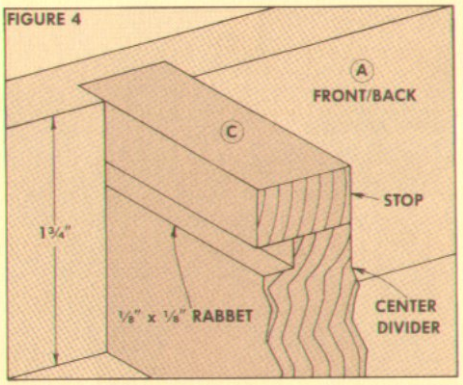

FIGURE 5

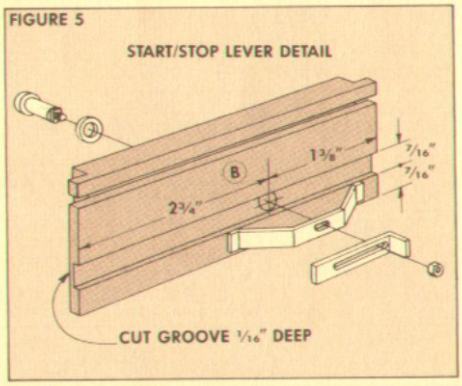

FIGURE 8

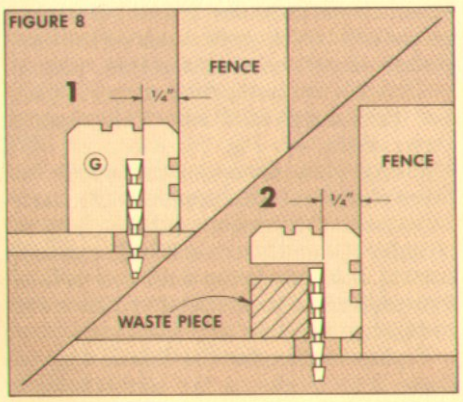

FIGURE 9

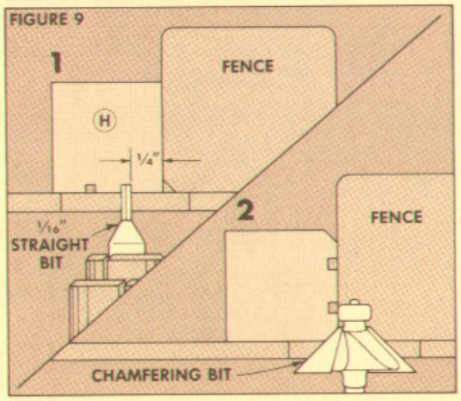

FIGURE 10

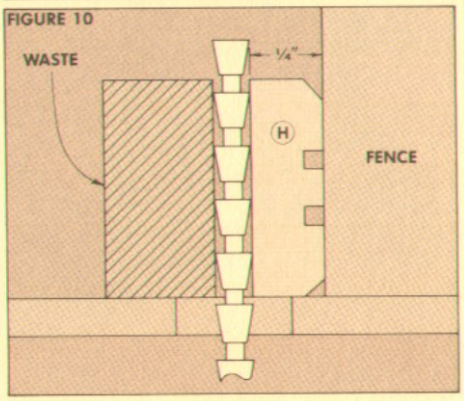

FIGURE 11

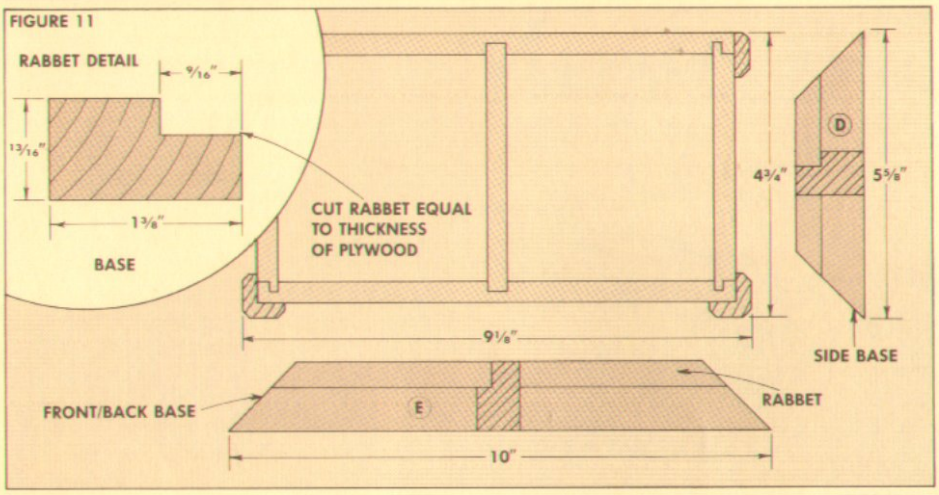

FIGURE 12

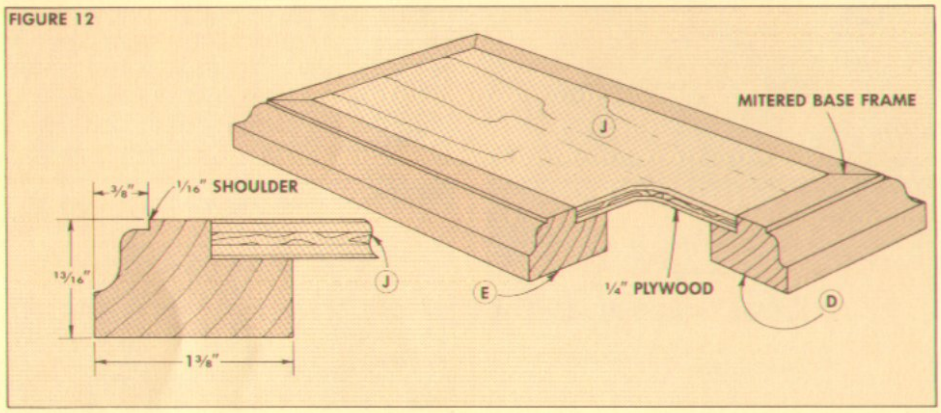

FIGURE 13

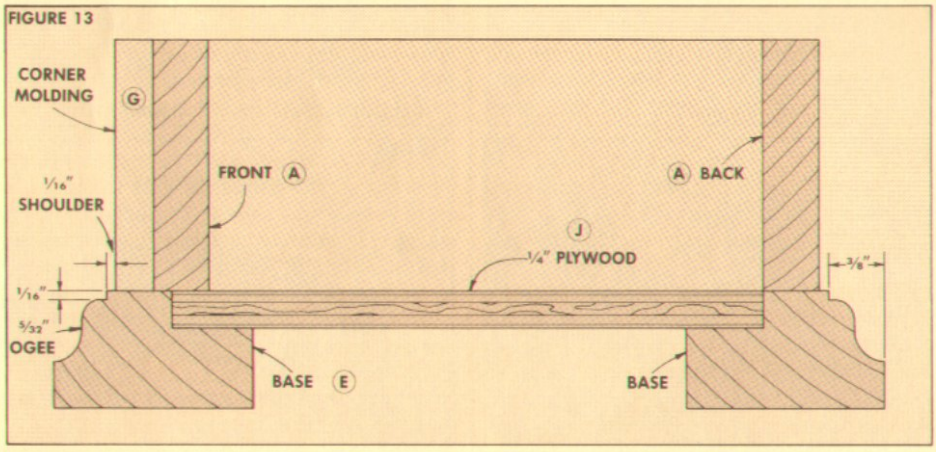

FIGURE 14

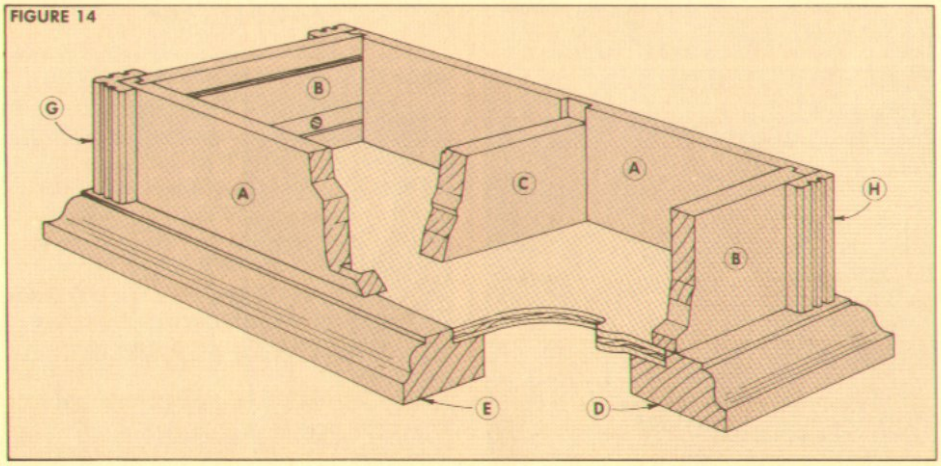

THE BASE

The base of this music box is a mitered frame, rabbeted to accept a 1/4" plywood bottom. To make the frame, rip a piece of 4/4 stock to a width of 1 3/8" and 40" long. (This is enough length for all four pieces of the frame.) Then cut a 1/4"-deep by 9/16"-wide rabbet on the inside edge of this strip for the plywood bottom, see detail in Fig. 11.

CUT TO LENGTH. Next, the four frame pieces (D and E) can be mitered to length. To determine the finished length of the front/back pieces (E), hold the corner moldings (cut earlier) against the body of the music box, and measure the length from molding to molding.

To get the length of the end pieces (D), measure the distance from the front molding to the back of the box. Now add 7/8" to both of these measurements to provide for the two 3/8"-wide ogee cuts, and the two 1/16"-wide lips, see Fig. 13.

ASSEMBLY. Go ahead and miter the four frame pieces to length. Then dry-assemble them and cut 1/4" plywood bottom (J) to fit the rabbet on the inside edge of the frame.

To assemble this frame, simply butt glue the four frame pieces together and glue in the plywood bottom. As the plywood bottom is glued in the rabbet, it will secure the mitered corners and hold the frame square.

MOLDED EDGE. The last step on the base is to rout the outside edges with a 5/32" ogee bit (on the router table). The height of the bit is set so it leaves a 1/16" shoulder on its final pass, see Fig. 12.

ATTACHING THE BASE

After the base frame is assembled, it's glued to the main body of the music box. Here, be sure that the box is centered so there's a 1/16" spacing between the corner moldings and the edge of the ogee profile on the base, see Fig. 13.

Finally, the four corner molding (G and H) can be cut to length (to match the height of the box) and glued in place.

THE PADS. To improve the sound of the music box, I raised it slightly by mounting four small pads (I) to the corners of the base. These pads are 1 1/8" x 1 1/8" square pieces of 1/4"-thick stock. Each side of these pads is chamfered on the bottom edge.

To make the pads, cut a strip 1/4" thick, 1 1/8" wide, and about 7" long. Then chamfer three edges, see Fig. 15. Next, cut off a 1 1/8"-long piece from the end which has three chamfers. This produces one pad.

To make the remaining three pads, re-chamfer the newly exposed end, and keep cutting and chamfering until you have all four pads cut. (At this point you have four pads, chamfered on only three sides.)

Trying to chamfer the fourth edge on these little blocks on the router table is

nearly impossible, so I chamfered the fourth edge using a small block plane.

After all four edges are chamfered, glue the pads to the bottom of the base so they're set back ⅛" from the outside edges.

THE LID

The lid to the music box is relatively simple. It's just a piece of stock that's cut to overhang the body of the box by ⅝" on all four sides. Then to dress it up a little, the edges are molded.

To make this lid, cut it ⅝" wider and longer than the outside dimensions of the box (including the corner moldings). Then to give it a custom look, rout a ¼" x 5/16" rabbet on the top edge of the lid and cut a cove with a ½" core box bit so it leaves a 1/16" shoulder on the rabbet, see Fig. 17.

Next rout another ¼" cove on the bottom side of the lid. The depth of this cut is set so that the cove leaves a 5/16"-wide flat on the outside edge of the lid.

THE INLAY. The lid can be used just like this. But that's too easy. I decided to spruce things up by adding a small oval inlay on the lid. All I really had to do to mount the inlay was rout out the recess and drop it in. Unfortunately, it isn't perfectly symmetrical. So there's really no way to cut out the perimeter of the recess without some hand work.

Although this sounds absolutely impossible, with a little patience, it can be done without wasting a lot of stock. On page 8 there's a detailed description on how to cut out the recess, and mount the inlay.

THE FINISHING TOUCHES

After the lid is complete, I cut small mortises for the hinges on the back side of the box, see Fig. 18. To simplify the process of mounting the hinges, cut the mortises to the full thickness of the hinges. These extra-deep mortises allow the hinges to be flush mounted to the lid.

FINISH. After the hinge mortises are cut, drill pilot holes for the hinge screws. But before mounting the hinges, go ahead and apply the finish. I used three coats of 1½ lb.-cut orange shellac.

MOUNT MOVEMENT. After the music box is finished, mount the musical movement and install the start/stop lever. Then slide the glass over the movement and secure it in place by pre-drilling and countersinking brass brads in the hold-down strip, see Fig. 19.

To dress up the open compartment of the box, I cut a piece of velour to cover the plywood bottom. And finally, I mounted the lid to the box.

After the box was completed, I invited my mother over for dinner. And just by chance, the music box was sitting right in the middle of the dining room table. She was delighted.

FIGURE 15

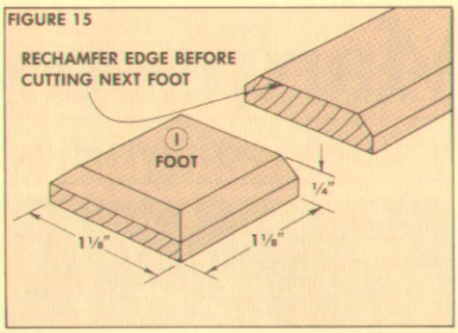

FIGURE 16

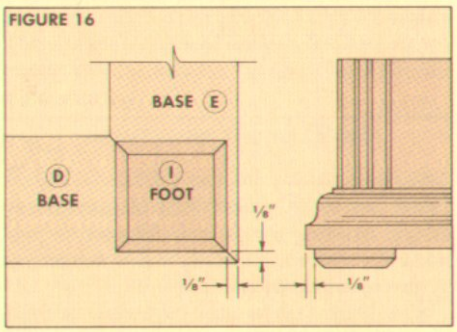

FIGURE 17

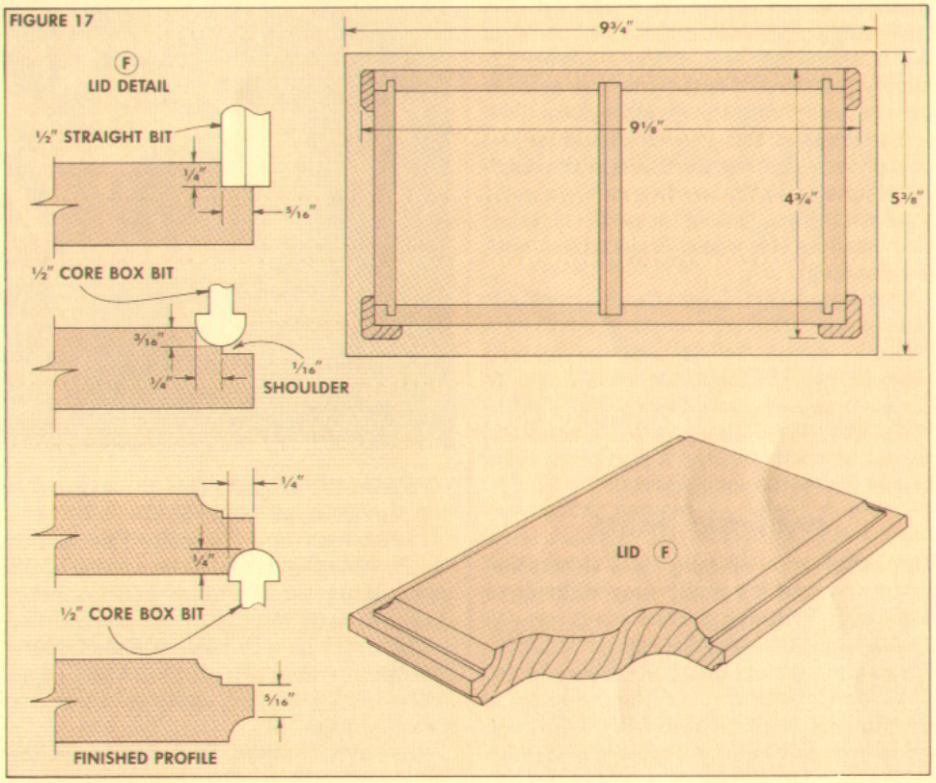

FIGURE 18

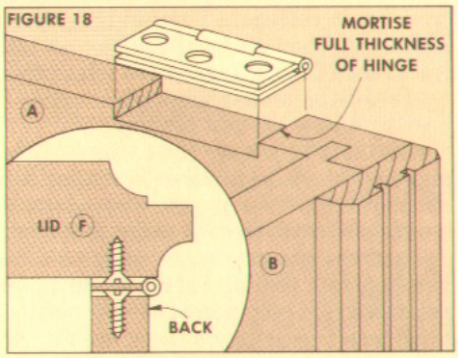

FIGURE 19

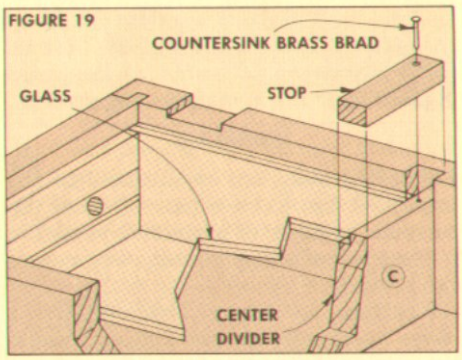

MATERIALS LIST

A	Front/Back (2)	⅜" x 1¾" - 8⅝"
B	Sides (2)	⅜" x 1¾" - 4⅛"
C	Center Divider (1)	⅜" x 1½" - 4⅛"
D	Base — Ends (2)	13/16" x 1⅜" - 5⅝"
E	Base—Front/Back (2)	13/16" x 1⅜" - 10"
F	Lid (1)	13/16" x 5⅜" - 9¾"
G	Molding — Front (2)	¾" x ¾" - 10"
H	Molding — Back (2)	¾" x ¾" - 10"
I	Pads (4)	¼" x 1⅛" - 1⅛"
J	¼" Plywood Bottom (1)	Cut to Fit

CUTTING DIAGRAM

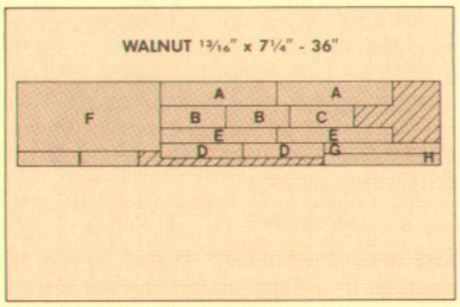

Marquetry

HOW TO WORK WITH INLAYS

There are two basic types of marquetry inlays: banding strips and decorative patterns. Of the two, banding strips are easier by far to work with.

Banding strips are narrow strips (usually ⅛" to ¾" wide) made up of a repeating pattern of small colored pieces of wood. Mounting these strips to a project is simply a matter of cutting a very shallow groove and gluing the strip in place.

The depth of this groove should be just slightly *less* than the thickness of the banding strip so later the banding can be sanded flush with the surface of the project (rather than sanding the whole project flush with the banding).

I've found that I get the cleanest cut (and a nice flat-bottomed groove) if a straight router bit is used to cut the groove. And, of course the easiest way to do this is on a router table. (If you want to use a saw to cut the groove, a rip blade should be used because it also produces a nearly flat-bottomed groove.)

MARQUETRY INLAYS

The other type of inlay is a decorative pattern — and it's a tad more difficult to work with. These patterned inlays come in a variety of shapes: ovals, circles, squares, diamonds and even rounded corner pieces.

At least, that's the way they appear in the catalogs. Most of these inlay shapes are actually surrounded by a rectangular piece of veneer that serves as a "container" to hold the small pieces of wood that make up the pattern. There's also a piece of brown paper tape on one side to hold all the pieces in place after the manufacturing process.

TRIMMING

Before the inlay can be mounted to the project, it has to be separated from the surrounding layer of protective veneer.

Use a pair of scissors to cut away most of the protective veneer — to within ¼" of the pattern, see Fig. 1. Then switch to a *sharp* Xacto knife and carefully cut around the outside of the pattern and through the brown paper tape, see Fig. 2.

SANDING. After the outside veneer is trimmed off, sand the edges of the pattern to get them as smooth as possible. Use fine-grit sandpaper on a sanding block — but instead of moving the block, hold it steady and move the edge of the inlay across the sandpaper.

INLAYING THE INLAY

Now comes the fun part. The inlay must be mounted in a very shallow recess in the surface of the project. This recess is cut to *exactly* the same shape as the inlay.

PAPER PATTERN. To make this recess, the first step is to mark the outline of the inlay. However, it's often difficult (especially on dark woods) to see the marked outline, so I simply made a one-of-a-kind pattern by "gluing" a piece of white paper to the workpiece with spray adhesive (see Sources, page 24).

REFERENCE LINES. In order to get the inlay centered on the workpiece, draw cross hatch reference lines on the paper, see Fig. 3. Then center the inlay over the cross hatch lines. (None of the inlays I've used seems to be exactly symmetrical, so I just "eyeballed" it into position.)

PINNING THE INLAY. Next, the inlay is pinned to the workpiece so its outline can be marked on the paper. Special marquetry pins (with thin flat points that don't damage the pattern of the inlay) can be purchased for this kind of work, but I just hammered flat points on a couple of plastic-head push pins and used them, see Fig. 4.

Once the inlay is in place (with the brown paper side up), draw the cross hatch reference lines across the brown paper tape. Then, to avoid confusion later, mark an "X" on the inlay and another on the paper pattern so when the inlay is removed, it can be returned to the same position, see Fig. 4.

SCORING. When the inlay is firmly pinned down, the next step is to mark its outline in the white paper. To do this I used an Xacto knife again to make a light scoring cut around the inlay, undercutting along the edge to compensate for the width of the knife blade, see Fig. 4.

Then make two or three more scoring cuts to a depth approximately equal to the thickness of the inlay. These cuts define the outline of the inlay in the surface of the wood. Now remove the inlay, and peel up the section of white paper, see Fig. 5. What remains should be an exact pattern of the inlay.

ROUTING THE RECESS

The contrast between the white paper and the wood makes it a whole lot easier to see the shape of the recess. Now all that remains is to rout out this recess.

Although it may sound like using a 2x4 to swat a fly, I use a router to make the recess. The router keeps the bottom of the inlay flat, smooth, and at a consistent depth. And it turned out to be a whole lot easier to control and maneuver than I thought it would be.

TEST RUN. The object is to rout as close to the edge of the scored outline as possible without actually cutting into it. But to be honest, I tried this precision routing on some scrap wood a couple of times before I felt comfortable with it. I used a ⅛" straight bit, but a ¼" bit also will work.

Set the depth of cut to just a little over half the thickness of the inlay, see Fig. 6. This shallow depth of cut means the inlay will stick up above the surface of the workpiece just a tad so it can be sanded flush with the surface later.

Routing such a shallow depth doesn't generate much sawdust or many wood chips, so I got down very close to the

router — especially when routing near the scored outline, see Fig. 7. (Although I did remove the router's chip shield to get a better view, I wore protective eyewear — no sense tempting fate.)

As the recess is routed, rotate the workpiece to keep the edge of the white paper pattern in sight. You should be able to get close enough to the score marks so just a small sliver of wood remains. Then clean out this sliver with an Xacto knife or small chisel, see Fig. 8.

Once the sliver is removed, the inlay should just pop right into the recess. But it's never quite that simple. I had to trim the recess and the edges of the inlay to get the two to mate perfectly.

GLUING

When everything fits, you're ready to glue the inlay in place. Contact cement is usually recommended, but because I found myself adjusting the inlay's position after the glue was applied, a slower drying glue (like Titebond or white glue) was easier to work with.

Apply a light coat of glue on the back of the inlay and another on the bottom of the recess. A very light coat is all that's needed. If there's too much glue, the excess won't have any place to go when the inlay is clamped, and it may buckle — ruining a lot of work.

Carefully place the inlay in the recess and cover it with a piece of waxed paper. Then place a piece of scrap wood on top and clamp this "sandwich" in the vise while the glue sets up.

REMOVING THE BACKING

Before the inlay can be sanded flush with the top of the workpiece, the brown paper tape has to be removed.

Lightly moisten (*very* lightly because the wood in the inlay might swell and buckle) the paper tape and *gently* scrape it off with a cabinet scraper, see Fig. 9.

After the paper backing is completely removed, use fine grit sandpaper (in a sanding block) to sand the surface of the inlay flush with the workpiece.

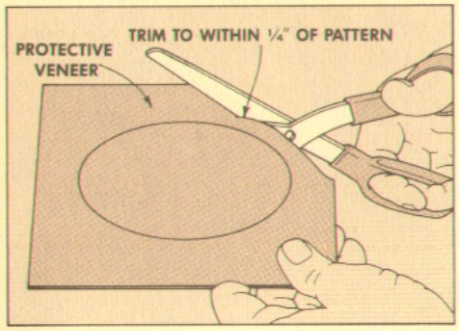

1 *Most marquetry inlays are surrounded with a piece of protective veneer. Use a scissors to remove most of this veneer to within ¼" of the pattern.*

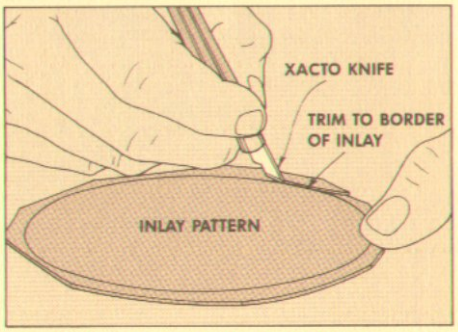

2 *Switch to an Xacto knife to trim off the rest of the protective veneer. Then sand the edge of the pattern on a sanding block to get the edges as smooth as possible.*

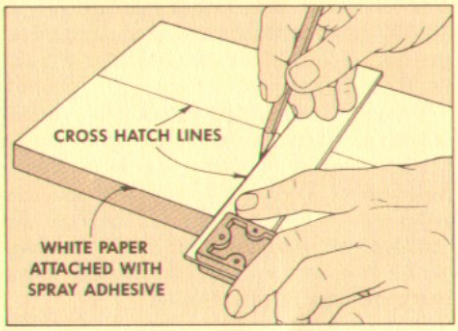

3 *Use spray adhesive or a thin coat of rubber cement to "glue" a piece of white paper to the workpiece. Then draw cross hatch lines to center the inlay.*

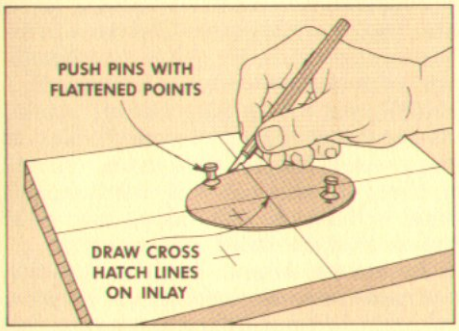

4 *Pin inlay to surface with flattened push pins. Then lightly score around the inlay with knife, undercutting the edges slightly. Make repeated cuts.*

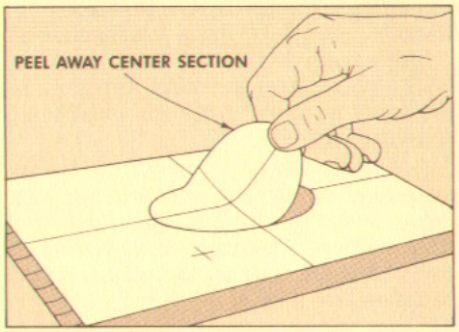

5 *Remove the inlay and peel up the paper. The outline of the white paper should create an exact duplicate of the inlay that's easy to see when routing.*

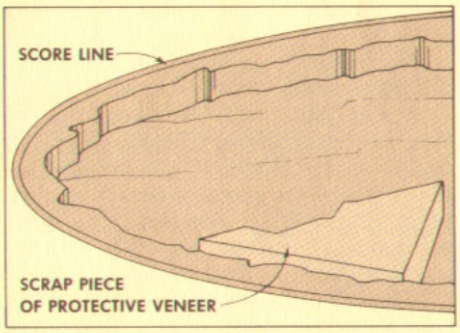

6 *Use a piece of the protective veneer as a gauge to determine the depth of cut for the router bit. Set depth to a little over half the thickness of the inlay.*

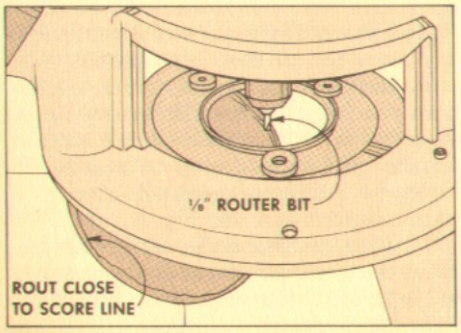

7 *Use protective eyewear and get down close to the action. Rout out the inlay's recess — getting as close to the outline as possible. Turn workpiece often.*

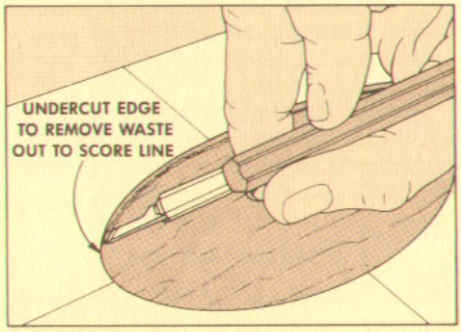

8 *Use an Xacto knife to trim away the sliver of wood left after routing. Undercut the edge of the recess slightly, and trim edge of inlay to get a good fit.*

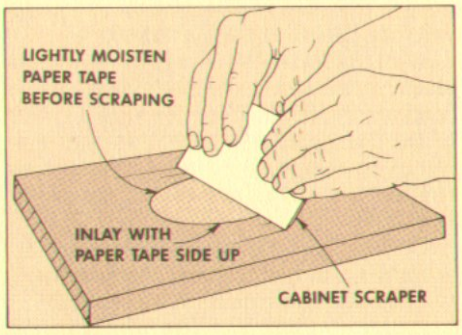

9 *Glue and clamp the inlay in place. Then lightly moisten the paper backing and gently scrap the paper off. Finally, sand the inlay flush with surface.*

Routed Box

PUTTING A PIN ROUTER THROUGH ITS PACES

Back in *Woodsmith* No. 13 we showed the technique for making a routed jewelry box. That technique involved using a template and a router equipped with template bushings to rout the compartments of the box.

But there's a better way to make this kind of project: with a pin router. The problem, of course, was that I didn't have a pin router . . . until now. When the tip for a pin routing attachment for the *Woodsmith* router table came in (see page 20), it presented the perfect opportunity to make another routed box.

I think these routed boxes are very intriguing. They stand apart from other woodworking projects because these boxes don't have any joints. Instead, the sides and interior walls of the box are "carved out" with a router. And in the case of the box shown here, that means using the technique of pin routing.

THE TEMPLATE

The first step for any pin routing project is to make a template. The design I used is shown in Figure 1. It's basically a racetrack shape with two angled dividing walls.

This pattern is designed for a box with finished outside dimensions of 3¼" x 9". However, the outside dimensions of the template (and the box blank) start out slightly larger (3½" x 10") to prevent the thin edges of the corner pieces from chipping. Then after the interior compartments are routed, the outside of the box is trimmed to final size.

THE TEMPLATE. To make the template for this box, cut a piece of ¼" Masonite 3½" wide by 10" long. Then lay out a 3¼"-wide x 9"-long rectangle centered on the template, see Fig. 1. This rectangle indicates the final size of the box and is drawn to ensure that the compartments are properly positioned on the template.

RACETRACK SHAPE. Next, the racetrack shape is marked on the template. Use a compass to draw half-circles with a radius of 1⅝" (for a diameter of 3¼") at both ends of the rectangle, see Fig. 1. Then draw another set of half-circles 3/16" inside the first ones.

To form the 3/16"-wide outside border down the length of the box, simply connect the end points of the four half-circles.

ANGLED WALLS. The two divider walls are angled at 60° from the base and divide the box into three compartments. To draw these angled walls, first draw a horizontal line through the center of the template. Then mark two points on the center line 3" from each end of the rectangle to indicate where the two divider walls intersect the center line. Finally, use a protractor (or 30-60-90 triangle) to draw two lines at 60°.

These two lines indicate the center of the walls. To get the total width of the walls, draw two lines 3/16" apart and equidistant from the center line.

CUT TO SHAPE. At this point the divider walls intersect the outside border at sharp angles — which are impossible to rout. So I rounded these sharp angles by drilling ½" and ¾" holes at each of the "corners" of the template, see Fig. 1.

These holes not only round the corners, they also serve as entry points for the sabre saw used to cut out the pattern.

After the holes are drilled, cut out the inside compartments with a sabre saw getting close to but not touching the marked outline. Then it's just a matter of using a file to smooth the edges of the template to the marked outline.

BOX FOR TEMPLATE. When the template is smoothed to shape, glue and tack it to a ½" plywood base. Then add ¼" plywood side and end pieces to form a box to hold the workpiece, see Fig. 2.

ROUTING THE BOX

Once the template is complete, all you need is a piece of stock for the box. The outside dimensions of this blank are cut to fit snugly in the template box (3½" x 10"). The thickness of the blank depends mostly on the size of the router bit that's used. The bit I used could cut to a maximum depth of 1¼", so I made the blank 1½" thick to leave a ¼"-thick bottom below the routed area.

CHOOSING THE WOOD. The choice of wood also makes a difference. The box shown here is made of cherry. After experimenting with several woods, I found that closed-grain woods (like cherry, maple, birch, gum, etc.) seem to work the best on this project. The thin divider walls have a tendency to chip out with open grained woods (like oak and walnut) but hold together on the closed-grained woods.

BIT AND PIN. After the blank is cut to size and mounted to the template box, mount a ⅜" carbide-tipped straight bit in the router and insert a ⅜"-diameter guide pin in the pin router, see Fig. 2.

ROUTING PATTERN. To rout the shape of each compartment, set the depth of cut of the router bit to 3/16" for the first pass. Then plunge the workpiece onto the router bit, and move the pin arm into position.

As each compartment is routed, the pattern you follow makes a difference in the smoothness of the cut. Move the workpiece so the guide pin moves in a counterclockwise rotation around the perimeter of each compartment, see Fig. 4.

Then to clean out the center section, move the workpiece so the guide pin starts at the far left side of each compartment and moves from the front edge of the template to the back edge, see Fig. 5. With this movement there is less chance of the bit "grabbing" the wood, and it's easier to control the cutting pattern.

Rout each compartment to a depth of 3/16", then raise the bit in 3/16" increments until the box is routed to a total depth of 1 3/16". For the final pass, raise the bit only 1/16" and rout the bottom as smooth as possible (to prevent a lot of sanding later).

ROUND-OVER EDGES. Once the depth of 1 1/4" is reached, the blank can be removed from the template, and the pin router can be taken off the router table. Then the inside edges of each compartment are rounded-over with a 1/4" round-over bit with a pilot, see Fig. 6.

It's best to round over the edges in two passes. First set the depth of cut of the bit so the shoulder is just barely above the surface of the router table.

Then on the second pass, raise the bit so the flat part cuts a 3/16"-deep shoulder around the perimeter of each compartment, see Fig. 6. This second pass will form a rabbet around the outside edges of each compartment and round-over both sides of the two divider walls.

CUT TO FINAL SIZE. At this point all the routing is done. However, the box is still larger than the finished size. To get the final size and shape of the box, rip 1/8" off the two long sides, and cut 1/2" off each end, see Fig. 7. These cuts should make the narrowest part of the walls on the sides and the ends 3/16" thick.

After the box is trimmed to size, there will be four little triangles of waste where the divider walls meet the side walls. Trim off these triangles with a sharp chisel, see Fig. 7.

BANDING STRIP. Finally, to add a little interest to the outside of the box, I added an inlay banding strip. (This banding strip conveniently covers the joint line between the pieces).

To mount this strip, use a 1/8" straight bit (on the router table) to cut a shallow groove on all four sides of the box, see Fig. 8. (The strip I used was 5/32" wide, so I made two passes with the 1/8" bit to cut the groove to fit the banding.) Then simply glue the banding strip in place.

THE LID. The last step is to cut a lid to fit the race-track shape. Resaw a piece of stock to a thickness of 3/8" and plane and sand it down to a final thickness of 5/16". (It should be a little thick to begin with so there's enough "meat" to remove the saw marks caused when resawing.)

Then cut the ends of the lid to fit the rounded corner pieces on the box. Finally, round over the top edge with a 1/4" round-over bit.

SANDING. The last step is to sand the inside and outside walls of the box smooth. Since most of the exposed surfaces of the walls are end grain, this sanding process can be a little tedious.

When the sanding was finally done, I finished this box with two coats of Watco Danish Oil finish.

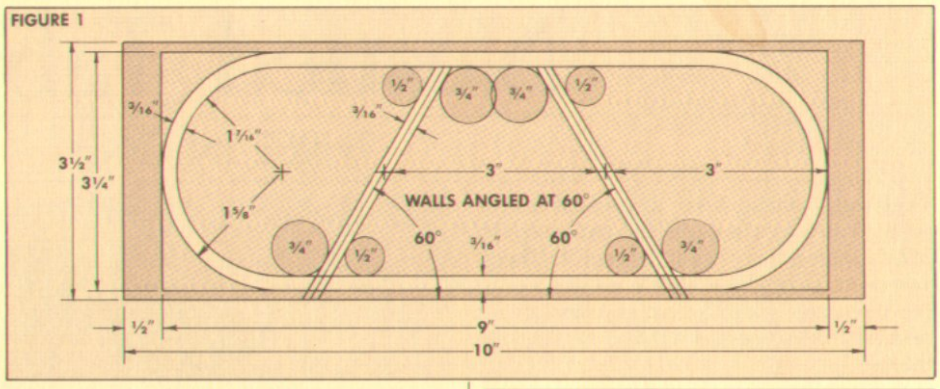

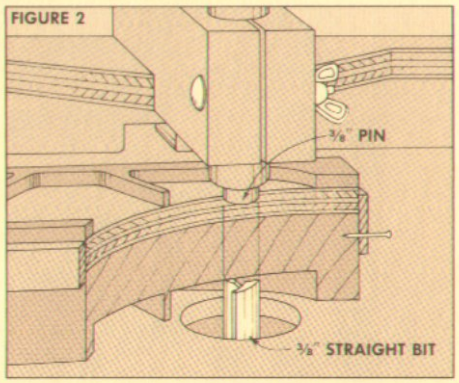

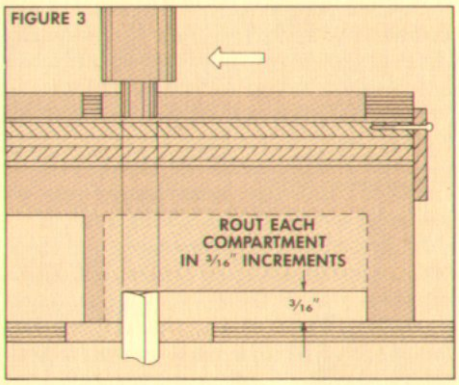

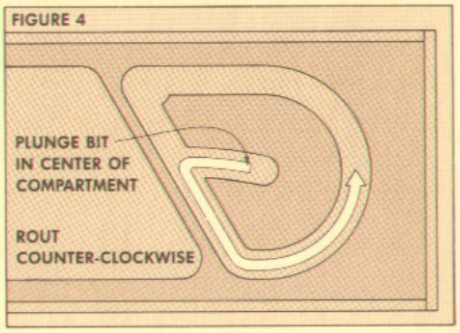

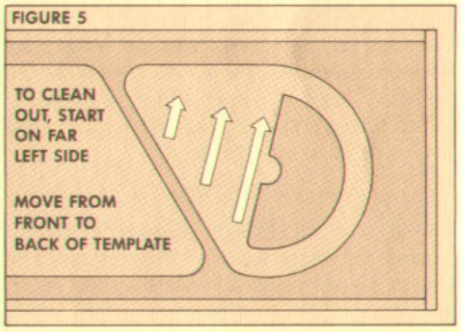

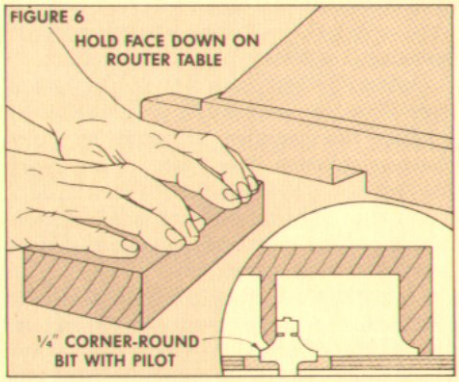

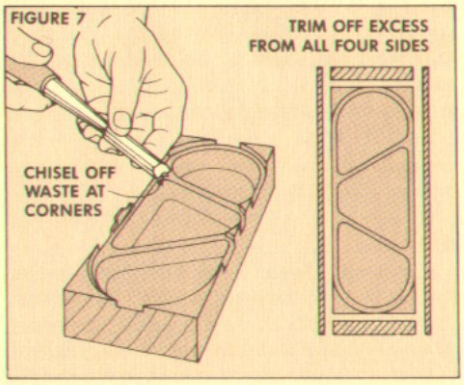

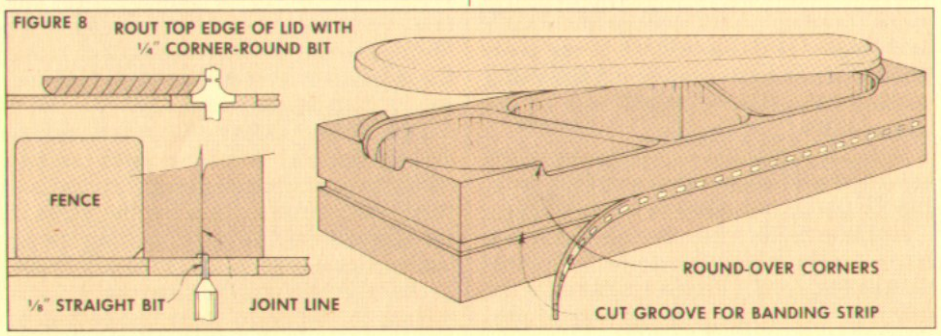

Nestled Tables

THREE IN ONE

Deciding to make a set of nestled tables with inlaid tops was easy. The hardest part of this project was trying to name it. There was an on-going debate around the shop as to which name was the most appropriate — nestled tables, nested tables, or stacked tables.

But the debate was settled as soon as I started to build "the tables". Normally three progressively smaller end tables are just stacked on top of each other (stacked tables). But the set I built is different. Rather than just stacking the tables on top of each other, each of the tables is "nestled" into the next larger one by means of a drawer-like sliding system.

At first glance the construction of these tables appears to be rather simple. However, they have their own unique set of problems. First of all, the largest two tables don't have a front apron. Eliminating the front apron serves two purposes: *asthetics*, the difference between the size of each table can be kept to a minimum; and *function*, the tables can be "nestled" with a simple sliding system.

But I'm getting ahead of myself. The first step is to cut the legs.

THE LEGS

The legs for all three tables are the same except for their length. They're all 1⅛" square pieces of stock (I used walnut) with a gentle taper cut on the two inside faces, see Fig. 2. The taper creates a delicate appearance, while allowing the heavier, full-thickness stock to be used where it's needed most — for additional strength around the mortises at the top of each leg.

CUT TO SIZE. The first step is to rip enough 6/4 (1 5/16" thick) stock to produce all twelve 1⅛"x1⅛" square legs. Then the four legs on the largest table (A) are cut 20¼" long.

However, because of the drawer-like sliding system used to "nestle" the tables, the legs on both of the *two smaller* tables (B and C) clear the floor by ¼". But rather than cut them to their exact length at this stage, they're cut ¼" longer than their final length, as if they extend to the floor. This way their tapers can be cut to exactly duplicate the tapers on the legs of the largest table.

With the additional ¼", the length of the legs on the smallest table are 18½" long, and for the middle sized table, 19⅜" long.

THE MORTISES. After the leg blanks are cut to length, they need to be both mortised and tapered. I decided to cut all of the mortises before tapering the legs to prevent accidently drilling angled mortises because of a tilting leg.

Before the mortises are cut, lay out all four legs for each table and label their position (for instance, left front leg), and their orientation (front face). Then mark the location of the mortises on each leg, see Fig. 1. Be sure that *only* the smallest table is marked for mortises *between* the *front* legs for a front apron.

I used the drill press to drill ¼"-wide slot mortises 11/16" deep, centered exactly on the width of the 1⅛" thick legs. (See *Woodsmith* No. 26 for a detailed description on how to cut a slot mortise.) Note: On the legs which are mortised on two sides, the mortises intersect to form an L-shape, see mortise details in Fig. 1.

THE TAPER. After the mortises are drilled, the next step is to taper the two *inside* faces of all twelve legs. This can be a very tricky process because the bases of the legs are only ¾" wide, putting the jig (and my hand) very close to the saw blade.

The tapering jig is set up so that it starts cutting the taper 16" from the bottom of the legs, and leaves a ¾" wide foot at the bottom of the leg, see Fig. 2.

Once the jig is set up, it can be left in the same position and used to cut the tapers on the legs for all three tables. (Although the overall lengths of the legs are not the same, the tapered area below the mortise is exactly the same on all twelve legs.)

TRIM TO LENGTH. After the tapers are cut, the last step on the legs is to trim ¼" off the tapered ends of the legs on the smallest two tables. Note: to produce a square end, be sure to keep the two straight edges of the legs *on the table* and *against the miter gauge* while removing the ¼" excess length.

THE APRONS

When the legs are complete, the next step is to cut the aprons for all three tables. Only the smallest of the three tables has the typical arrangement of four aprons; the largest two tables have only three aprons, see Fig. 4.

I started by ripping enough material for all 10 aprons to width, and slightly longer

than needed, see Fig. 3.

The next step is to cut the aprons exactly to the lengths shown in Fig. 3, (these measurements include the length of the tenons on both ends of the aprons).

TENONS. Once the aprons are cut to length, set up the table saw to cut ⅝"-long tenons to fit the mortises in the legs. The final shoulder-to-shoulder measurement of the aprons, shown in Fig. 3, is extremely critical — it must be correct in order to have equal spacing between the legs on the three tables. Accuracy (or the lack of it) in these measurements will also determine if, and how much, custom fitting is needed for the table's sliding system to work properly.

After the tenons are cut, round over the corners of the tenons to fit the slot mortises in the legs. The ends of the tenons that meet in the eight L-shaped mortises have to be mitered before they can be driven home, see Fig. 5. Then I assembled the tables and checked them for square.

ASSEMBLING THE LEGS AND APRONS

The legs and aprons are assembled in two steps: first the side aprons are joined to two legs. Then these two side assemblies are joined with the back apron (and the front apron on the smallest table) to form the table's base units.

The only problem with this assembly procedure is that if the bases aren't glued-up perfectly square, the error will show up as unequal spacing between the legs of the three tables when they're nestled together (and the sliding system will never work as smoothly as it should). And to make matters worse, if the assemblies have any twist, the effect is the same as if they were out of square.

To check the side assemblies for twist, dry-clamp the side apron and the legs on a flat surface. If there is any twisting, it can be detected by looking for the ends of the legs lifting off the flat surface, see Fig. 6. Any twist that's found should be removed by trimming the sides of the tenons accordingly.

Once the side assemblies are twist free, finish sand the aprons. Also, lightly sand (or scrape with a cabinet scraper) the face of the leg around the mortises.

At this point, glue the side aprons and legs of each table together as a subassembly. (Don't glue these subassemblies to the back aprons yet.) Check these side assemblies for square by measuring the distance between the outside edges of the top of the legs (near the aprons). This distance should equal the distance between the outside edges of the legs, measured at their feet. If they don't match exactly, try slightly loosening or tightening the clamps at the top of the legs. Sometimes the clamps can actually pull a leg in or out of alignment.

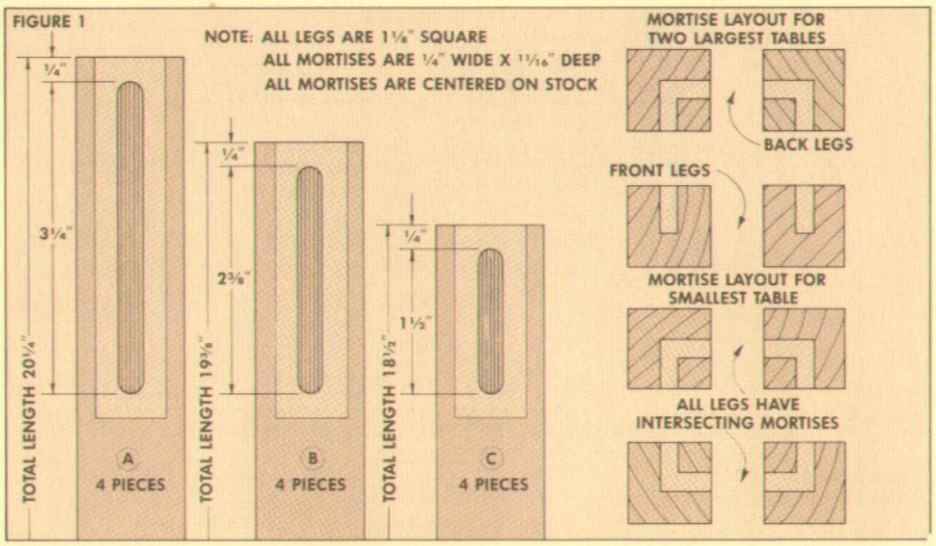

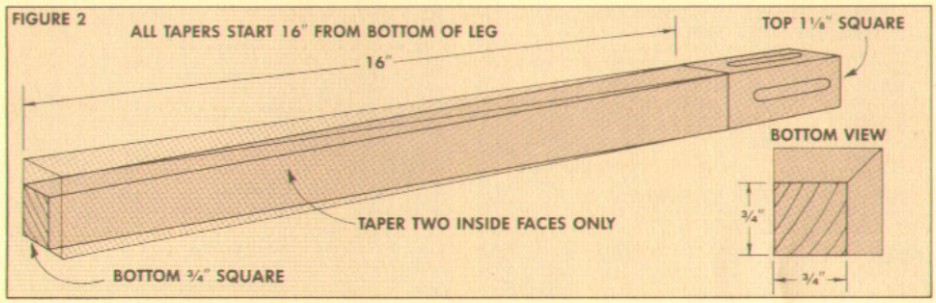

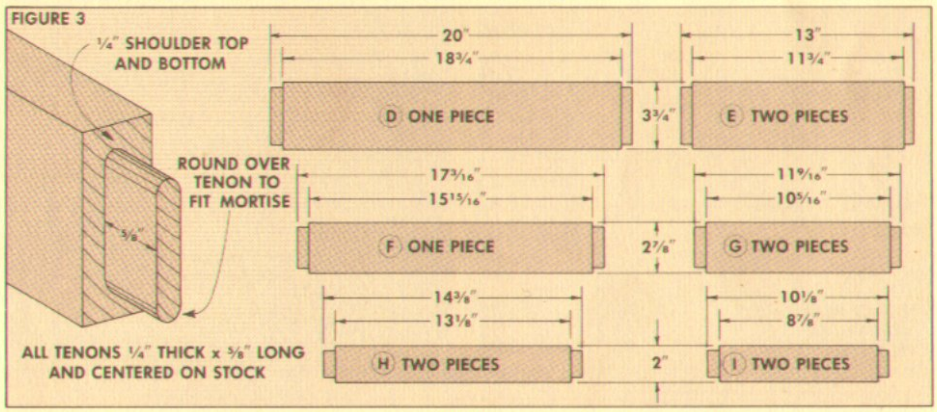

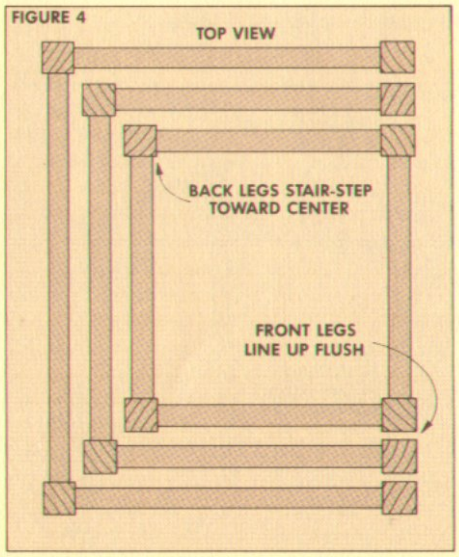

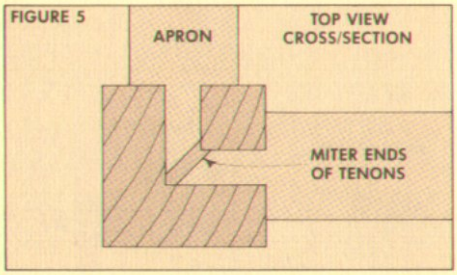

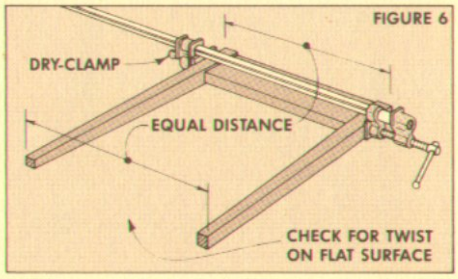

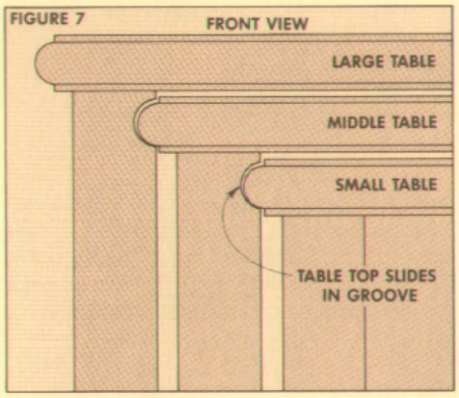

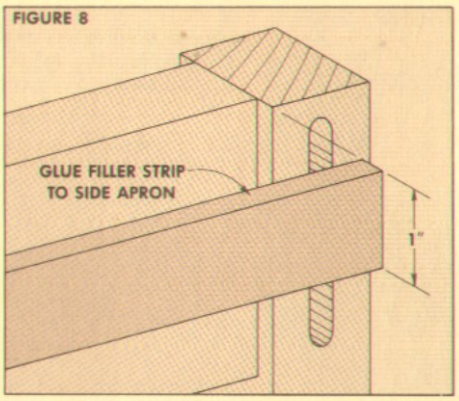

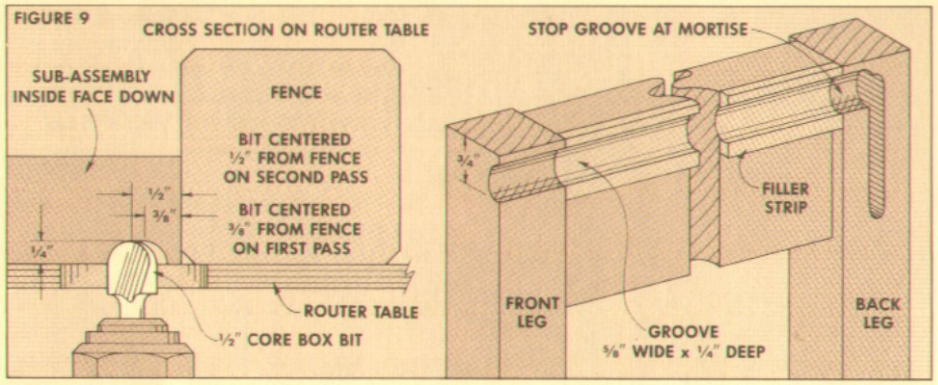

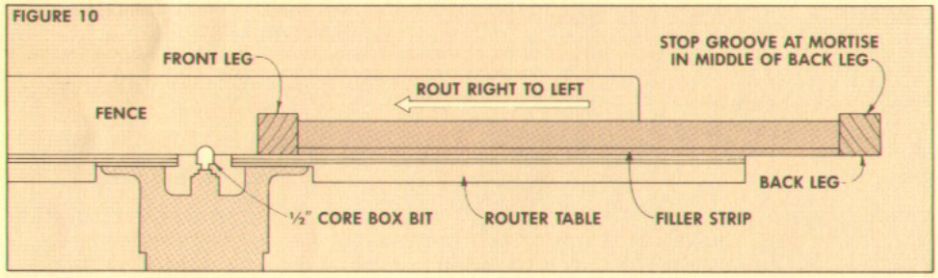

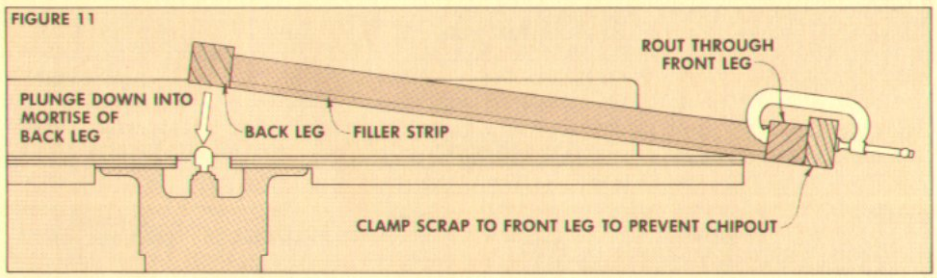

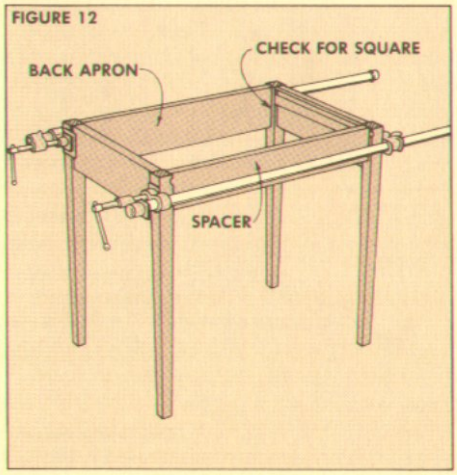

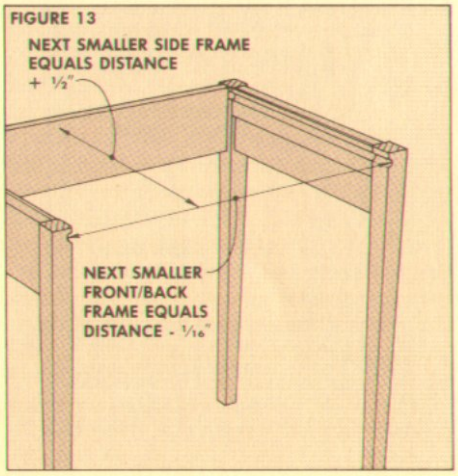

THE SLIDING SYSTEM

The heart of this drawer-type sliding system is a stopped groove cut in the side aprons of the *two larger* tables, see Fig. 7. When the tables are "nestled", the molded edges on the table tops slide in the stopped grooves, suspending the smaller two tables ¼" off the floor.

FILLER STRIP. Before the grooves are cut, a filler strip (P) must be added to fill the space between the side apron and the inside face of the legs, see Fig. 8. Cut this strip slightly thicker than needed, and trim it to length. Then after it's glued in place, plane the strip flush with the inside face of the legs.

CUT THE GROOVE. I used a ½" core box bit on the router table to cut a ⅝"-wide, ¼"-deep stopped groove (in two passes) so that its bottom edge is exactly ¾" from the top of the side apron, see Fig. 9. To rout the groove, center the bit ⅜" from the fence on the first pass, and ½" on the second pass.

The groove stops in the center of the mortise on the rear legs, see Fig. 9. On the right side, the routing starts at the front edge of the front leg, and stops at the rear mortise, see Fig. 10.

The left side requires *starting* the groove with a plunge cut in the middle of the mortise in the rear leg and continuing out through the front leg. (Use a piece of scrap clamped to the front face of the leg to prevent any chip out, see Fig. 11.)

ASSEMBLY. After the grooves are routed, the side assemblies are glued together with the back apron (and the front apron on the smallest table), again checking for twist and squareness. On the two larger tables, I also added a temporary spacer between the front two legs that was exactly as long as the shoulder-to-shoulder distance of the back apron, see Fig. 12.

THE TOP

Now the fun begins. All three table tops consist of a solid wood frame, a plywood insert, and an inlay banding.

THE FRAME. I started on the top by making the frame first. Rip enough 4/4 stock to 1½" widths for all the frame members on the three tables. Then cut a ¼" groove, ½" deep in the edge of the each piece, see detail in Fig. 14.

DETERMINING SIZE. Once the groove is cut, the frame members are ready to be mitered. To determine the length of all four frame members (J and K) for the largest table, simply add 1" (for a ½" overhang on all four edges) to the distance between the outside edges of the table legs.

To determine the length of the front/back frame members (L and N) on the two smallest tables, measure the distance between the deepest point of the grooves in the side frames on the next larger table,

and subtract 1/16", see Fig. 13.

To determine the length of the *side* frame members on the two smaller tables (M and O), measure the distance from the *inside* face of the back apron, to the *front* face of the front leg and add an additional 1/2" for the front overhang.

PLYWOOD PANEL. After the miters on all three table tops are cut, measure the inside dimensions on all three frames. To find the size for the 3/4"-thick plywood panel, add 1" to both dimensions for the 1/2"-long tongues, see Fig. 15. This is one place where accuracy is a must. Any error in the size of the plywood insert will make it impossible to accurately rout a rabbet for the inlay banding later on.

PLYWOOD TONGUE. Next, cut the tongues on the edges of the plywood panels to fit the grooves in the frame members, see cross section in Fig. 15, and Fig. 16. Be sure the shoulder-to-shoulder measurement on the plywood matches the inside dimensions of the mitered frame.

Note: When cutting the tongue, make several duplicates to use when setting up for the inlay banding.

INLAY BANDING. When the tongues are cut on the plywood panels, the next step is to rabbet the face veneer on the plywood for the inlay banding, see Fig. 17.

The depth of the router bit for the rabbeting cut is set so that it's slightly *less* than the thickness of the inlay banding. Then the fence is set to cut the groove in the face veneer exactly the same *width* as the inlay, see Fig. 17.

Before cutting this rabbet, I routed a test rabbet on a duplicate piece cut earlier. Then this piece is slipped into a frame member, and the actual fit of the inlay banding is checked. Then the frame members and the plywood panels are glued together.

To inlay the banding strips, I simply mitered the corners, and glued them in place, see Fig. 18. Then finally, all three tops can be finished sanded.

MOLDING THE EDGE. The last step before the tops are attached to the base assembly is to rout the table top edges using a 1/4" rounding over bit on the router table. Starting with the smallest table, rout the edge profile until it fits into the groove in the next larger table base, see Fig. 20. (If the top is too wide to fit the groove, use the table saw to reduce the width in 1/32" increments.) Repeat this process on the middle table, and the largest table.

When the outside edges are molded, glue the table tops to the base assemblies so they're centered on the width and overhang the front edge of the base by 1/2". (This will ensure that the front of the legs all line up when the tables are nestled.)

Finally I finished the tables with three coats of 1 1/2 lb.-cut shellac, and two coats of furniture paste wax.

FIGURE 14

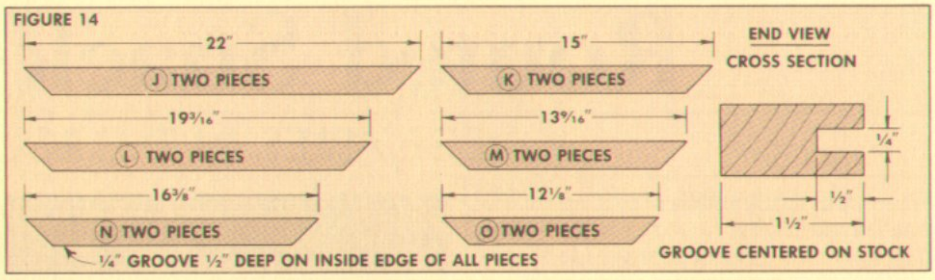

FIGURE 15

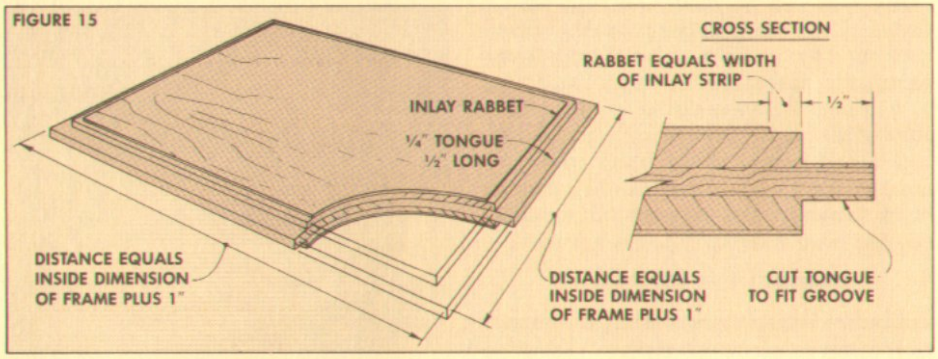

FIGURE 16

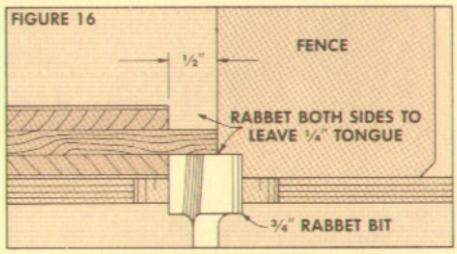

FIGURE 17

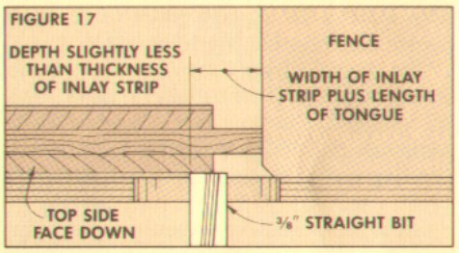

FIGURE 18

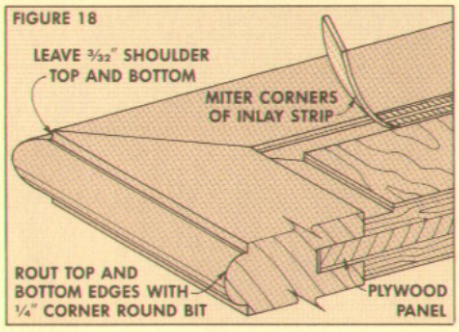

FIGURE 19

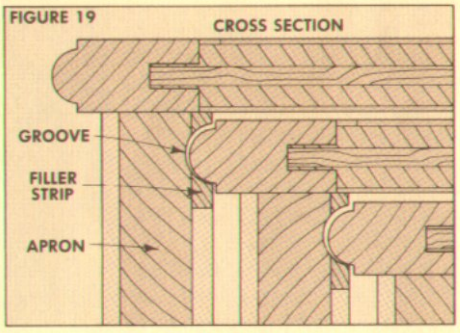

MATERIALS LIST

A	Lg Legs (4)	1 1/8 x 1 1/8 - 20 1/4
B	Md Legs (4)	1 1/8 x 1 1/8 - 19 1/8
C	Sm Legs (4)	1 1/8 x 1 1/8 - 18 1/4
D	Lg Back Apron (1)	13/16 x 3 3/4 - 20
E	Lg Side Aprons (2)	13/16 x 3 3/4 - 13
F	Med Back Apron (1)	13/16 x 2 7/8 - 17 3/16
G	Med Side Aprons	13/16 x 2 7/8 - 11 9/16
H	Sm Frt/Bk Aprons (2)	13/16 x 2 - 14 3/8
I	Sm Side Aprons (2)	13/16 x 2 - 10 1/8
J	Lg Frt/Bk Frames (2)	13/16 x 1 1/2 - 22
K	Lg Side Frames (2)	13/16 x 1 1/2 - 15
L	Med Frt/Bk Frames (2)	13/16 x 1 1/2 - 19 3/16
M	Med Side Frames (2)	13/16 x 1 1/2 - 13 9/16
N	Sm Frt/Bk Frames (2)	13/16 x 1 1/2 - 16 3/8
O	Sm Side Frames (2)	13/16 x 1 1/2 - 12 1/8
P	Filler Strip (4)	cut to fit
Q	Lg Panel (1)	3/4 x 13 - 20
R	Med Panel (1)	3/4 x 11 9/16 - 17 3/16
S	Sm Panel (1)	3/4 x 10 1/8 - 14 3/8
T	Inlay Strips (5)	36" lengths

CUTTING DIAGRAM

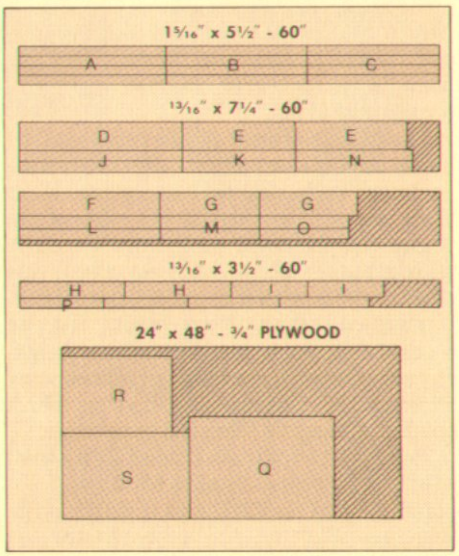

Routed Snack Tray

VEGETABLES IN THE ROUND

When I was in the middle of routing out the wooden snack trays, it occurred to me that this is the first project to appear in *Woodsmith* that can be made entirely with a router. Every step in the process — from routing the insides of the tray compartments, to cutting the tray into a circle, to routing the cove molding on the outside edge of the tray — is done with the router.

Granted, some other shop tools are needed to get set up, but once the project blank is ready, the only tool these trays require from start to finish is a router.

MAKING THE TEMPLATE

But before I could start routing the trays, I had to first construct a template. (I started with a 13" x 13" square piece of ¼" tempered Masonite for the template).

The overall design for the template is based on a small circle that's inset, and off-centered in large circle. To achieve the wedge shaped compartments, I added five dividing walls between the two circles, see Fig. 3.

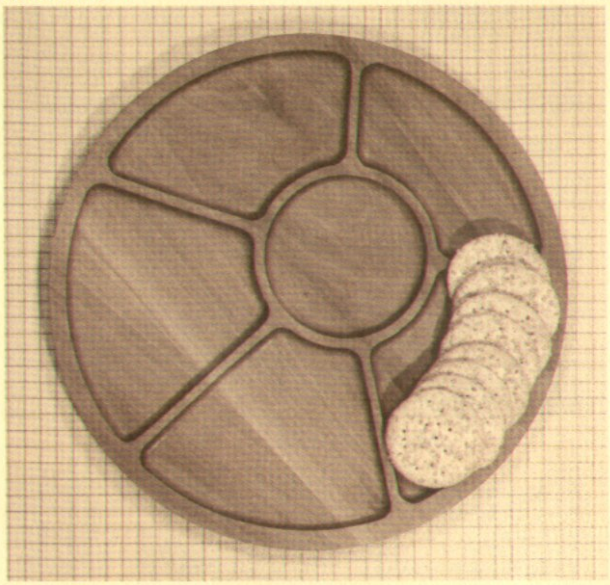

LOCATE CENTERS. The center of the large outside circle (point "A") is located by drawing two diagonal lines connecting the corners of the square. (The center point is where these diagonal lines intersect.) The center of the smaller, off-set circle (point "B") is located on one of the diagonal lines, 1¼" from point "A", see Fig. 1.

DRAW CIRCUMFERENCES. After the center points are marked, I used a compass to draw a total of three circles, see Fig. 2. The largest circle (which represents the inside edge of the outside wall) uses point "A" as its center, and has a *radius* of 5¾".

The two small inset circles represent the inside and outside edges of the center compartment walls, and both use point "B" as their center. For the outside edge of the center compartment wall, I drew a circle with a radius of 2¼", and for the inside edge, a circle with a 2" radius, see Fig. 2.

DIVIDER WALLS. Next, draw lines to separate the large circle into five wedge-shaped compartments. All five lines start at point "B" and use the line on which points "A" and "B" lie as a reference.

Two divider walls are angled 45° up from point "B", two are angled 60° down from point "B" and the fifth wall is right on the line, see Fig. 3. Use a protractor, or triangle to determine the angle for these lines.

THICKEN LINES. After the center lines for the walls are marked, thicken each wall by drawing two more lines ⅛" to each side of the center line (making each wall ¼" wide), see detail in Fig. 3. Note that all of these lines start at the outside circle and stop where they intersect the largest of the two off-set circles, see Fig. 3.

CUTTING OUT THE PATTERN

After the pattern is marked on the Masonite, the next step is to cut the template to shape. To cut the curved edges as smooth and accurate as possible, I decided to use a router with a trammel point attachment.

STARTER HOLES. Before routing the curved sides, drill holes for starting the cuts. The five wedge-shaped compartments each receive two starter holes, one adjacent to the outside wall, and another next to the outside edge of the center compartment wall, see Fig. 4. Also drill one starter hole next to the inside edge of the center compartment wall. All of these holes should be drilled so their edges just touch the inside of the line.

TACK DOWN TEMPLATE. After the starter holes are drilled, attach the template to a piece of plywood to keep it steady while routing out the compartments. (The plywood should be large enough so it can be clamped to a work surface without the clamps getting in the way of the router.)

When tacking the template to the base, drive a brad in each corner of the template. Drive at least two brads in the off-set center circle to keep it (and the router and trammel point attached to this piece) in place as it's cut free by the router.

ROUTING. After the template is secured to the plywood base, position the trammel point on point "A" (the center of the large circle). Then adjust the length of the trammel attachment so the *outside* edge of the bit cuts exactly on the marked line of the outside circle. (I used a ¼" carbide bit set deep enough to cut completely through the Masonite template in one pass.)

As the compartments are routed, be

FIGURE 1

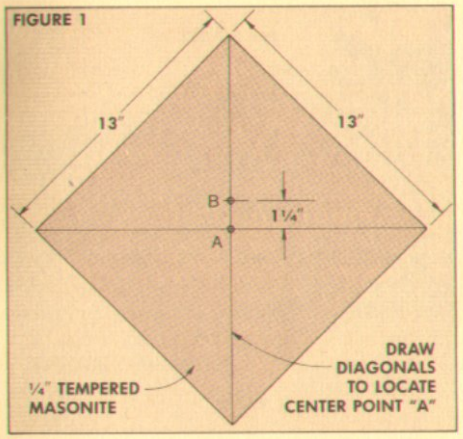

FIGURE 2

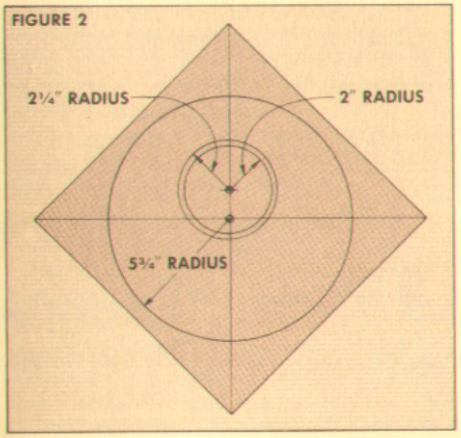

FIGURE 3

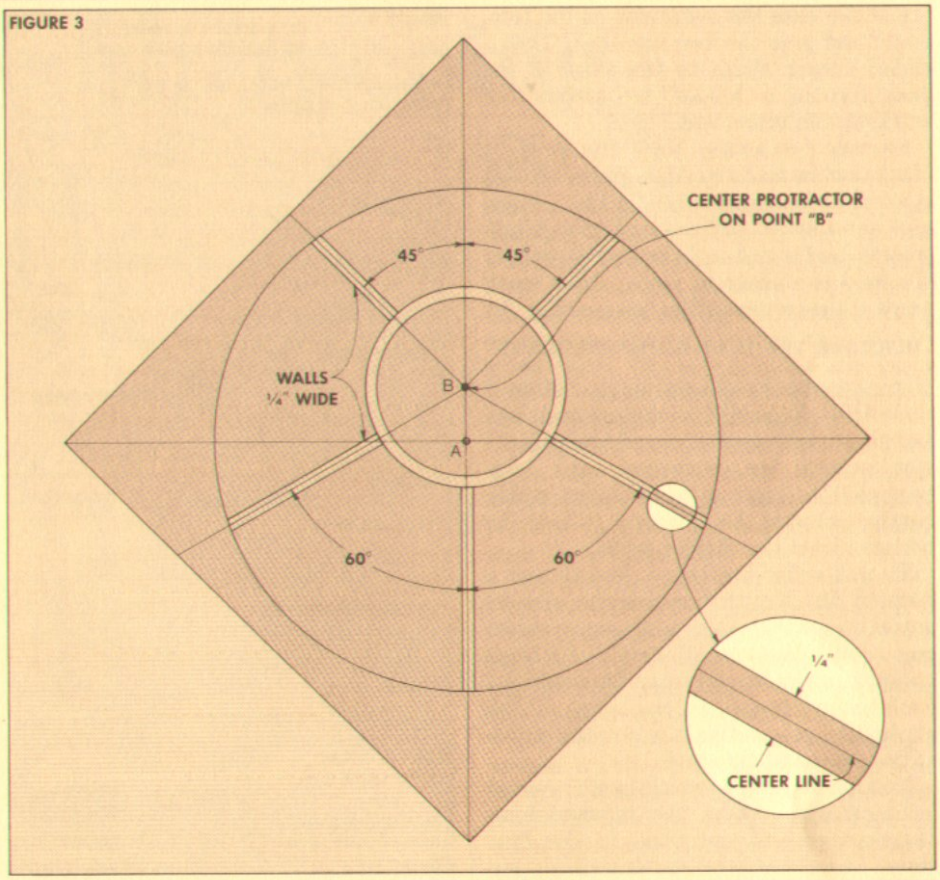

sure to take it slow and easy as you approach the lines for the divider walls. It's better to stop short of these lines than to take the chance of cutting into them.

After the curved lines of the outside circle are cut, shift the trammel attachment to point "B" and adjust it so the *inside* edge of the bit cuts right on waste side of the outside edge of the center compartment wall, see Fig. 6. Again, be sure to stop short of the divider walls.

Finally, with the trammel point still in point "B", adjust its length to cut the inside wall of the center compartment. Then move the router in a clockwise rotation, making a single cut around the entire circumference of this circle.

CUTTING THE SIDES

When the routing is finished, the template should look something like Figure 6. Next remove the template from the plywood, and cut the divider walls.

I used a saber saw mounted upside down on a piece of plywood to cut the divider walls (see page 22). Since the sabre saw blade leaves a fairly ragged edge, it's best to cut close, but not quite touching the lines. Then file and sand the edges of each compartment as smooth as possible.

HOLDER FOR WORKPIECE

Before using the template anchor it to a ½" plywood base to hold the walls steady as the pin hits them while routing.

FIGURE 4

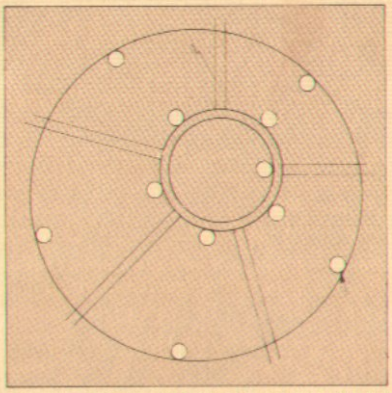

DRILL ½" STARTER HOLES IN EACH COMPARTMENT

FIGURE 5

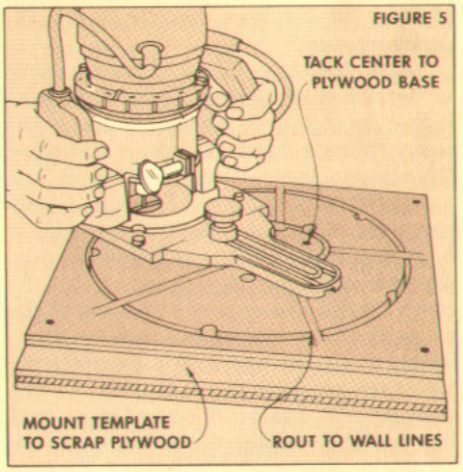

FIGURE 6

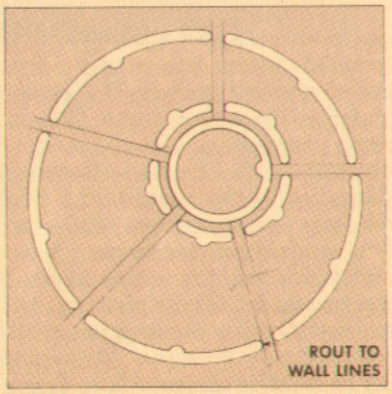

ROUT OUT CENTER COMPARTMENT COMPLETELY

FIGURE 7

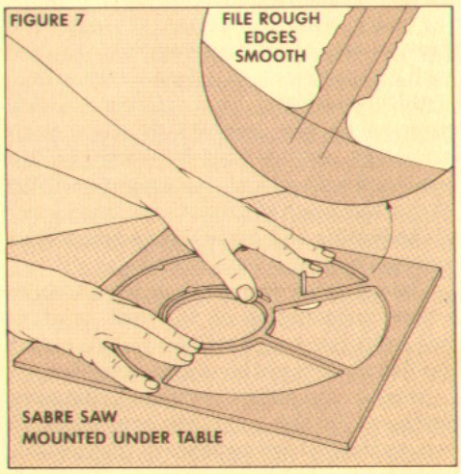

Cut the base the same size as the template, and glue the two together. Then I added keeper strips to the sides of the base, forming a "holder" box to hold the workpiece in place, see Fig. 8.

PROJECT BLANKS. Now the project blanks can be made by edge-gluing enough stock to form a square 13½" x 13½". Plane and sand both surfaces of this blank smooth, and trim it to fit in the holder box. (To hold the blank in place, drive small brads at the corners of the box, see Fig. 8.)

ROUTING THE TRAY COMPARTMENTS

It took some head-scratching before I came up with the right combination of bits and pins to achieve the curved-wall effect I was looking for. I wanted each compartment to have a flat bottom which gently curved at the "corners" (where the bottom meets the divider walls).

To get a flat bottom, I had to use a straight bit. But that meant the corners would be square. After some experimenting, I found that a combination of a large guide pin and a small router bit would cut each compartment so the edge of the straight bit stopped right where the radius of the corner would start.

This means each compartment is routed in two stages — with two different combinations of bits and pins. In the first stage, I used a ½" straight bit with a 1" pin to rout the flat bottoms in each compartment, see Fig. 9.

Adjust the straight bit so it cuts about ⅛" deep on the first pass. Then turn on the router, plunge the center of one of the compartments down on the bit, and move the pin arm into position, see Fig. 8.

ROUT COMPARTMENTS. To rout a compartment, move the template so the pin is against a wall, and then follow a counter-clockwise path around the perimeter of the compartment. To clean out the rest of the waste in the center of the compartment, simply move the template back and forth under the pin until the entire area in the compartment has been passed over with the pin. Then repeat the same procedure for all the compartments on the template.

Finally, reset the router and make two more passes (in ⅛" increments) to rout each compartment to a final depth of ⅜".

ROUND CORNERS. To create the rounded corners at the bottom of each compartment, switch to a ½" core box bit combined with a ½"-diameter pin, see Fig. 10. Set the depth of cut so the bit is well shy of the bottom and make a pass around the perimeter of each compartment.

Then increase the depth of cut a little at a time (sneaking up on the final depth of cut) until the round corner profile meets the flat bottom of the compartments.

Note: Although the corners of each compartment in the template are "square" (where the divider walls meet the circles), the routed pattern on the tray will have rounded corners because the guide pin can't follow the square shape. This is the pattern I wanted.

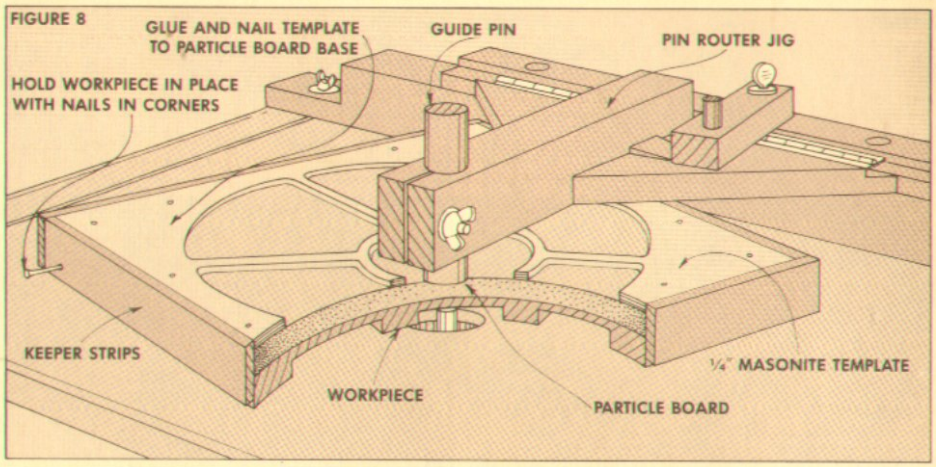

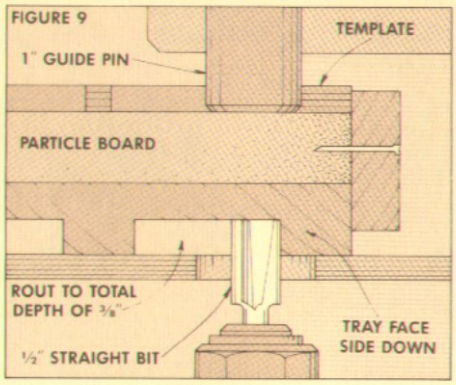

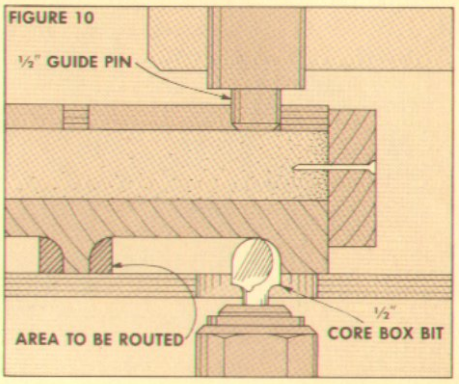

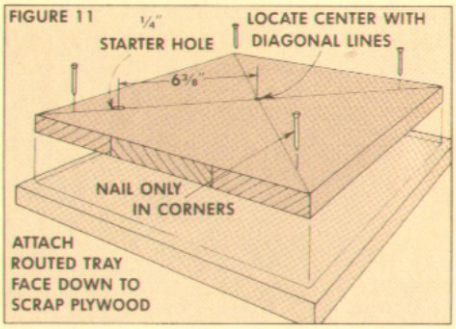

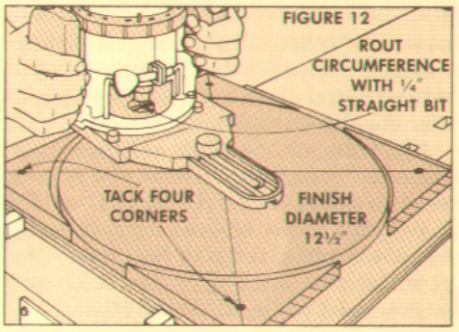

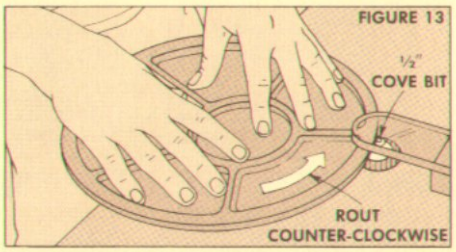

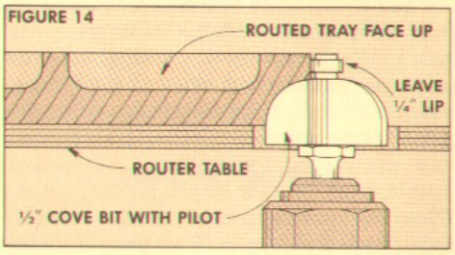

CUT OUT TRAY. When all the compartments are routed, remove the project blank from the holding box, and trim the tray to its final circular shape.

To do this, tack the project blank (face down) to a piece of scrap plywood, nailing through the corner waste areas, see Fig. 11. Then locate the center of the project blank by drawing diagonal lines from corner to corner.

Set the trammel attachment on the router to cut a 6¼" radius (for a 12½" diameter). Make several succeedingly deeper passes with the router to free the tray from the blank, see Fig. 12.

COVE MOLDING. After the snack tray has been cut out, rout a cove on the outside edge (to create a "finger hold") using a ½" cove bit and pilot on the router table, see Figs. 13 and 14.

FINISHING. Finally, sand each of the compartments to remove any marks left by the router bits. Then I finished the snack tray with Behlen's Salad Bowl finish.

Saw Sharpening

TIPS FOR CARBIDE-TIPPED BLADES

In the last issue of *Woodsmith* (No. 27) there was an extensive article on carbide-tipped saw blades — how they differ from steel blades, how to choose them, and how well they work. In that article, we tried to talk about most of the aspects concerning saw blades, except one: the problems associated with sharpening a carbide-tipped blade.

Every blade (even the highest quality blade) will eventually lose its store-bought edge. This is when it pays to know the tricks to determine when, where, and how a carbide-tipped blade is sharpened.

The first step in this process is determining *when* to sharpen a carbide-tipped blade. Timing is critical. The longer sharpening is postponed, the harder it is to reproduce a sharp edge.

Waiting too long before sharpening a carbide-tipped blade usually requires having to remove more carbide than normal to produce a sharp edge. This is a result of the tips rounding over — excessively on a very dull blade — as they become dull. The duller the blade, the rounder the edge — which means a greater amount of carbide has to be removed to resharpen the tips.

On a blade that is sharpened when needed, the amount of carbide removed can be as little as .005". But if the blade is allowed to become overly dull, the amount of material removed can easily be twice that much.

WHEN TO RESHARPEN. Okay, sharpening as soon as it's needed is a good idea. But how can you tell when the blade needs to be resharpened?

One of the easiest ways is to recognize the cutting characteristics of a dull blade. The most common characteristic is that a dull blade takes more power to make a cut than a sharp blade. This increased power requirement usually is detectable when the motor begins to bog down, or if you have to apply more pushing pressure than normal while making a cut that previously created no problems.

(Some large industrial users attach an amp meter to their equipment so that they can accurately monitor the amount of power a saw consumes while cutting. When the power consumption increases beyond a certain point, the operator knows that the blade is becoming dull, and it's removed and sent out for sharpening.)

However, in a home shop it isn't always practical, or even feasible, to try and make valid comparisons between the amount of power a blade is currently consuming with the amount it consumed six months ago. So the next best determining factor is a physical inspection of the cutting edge of the carbide tips.

Using your own sense of touch is a pretty good guide. If the tip doesn't have *the feel* of a sharp cutting edge, it probably needs resharpening.

Another way to determine dullness is to hold the blade near a strong light. If light reflects off the cutting edge, it's dull. Conversely, a sharp edge reflects no light.

SHARPENING

When it comes to sharpening, there's only one substance hard enough to abraid tungsten carbide tips — industrial diamond wheels. But just using the right material to sharpen a carbide-tipped blade doesn't mean that it will be sharpened correctly.

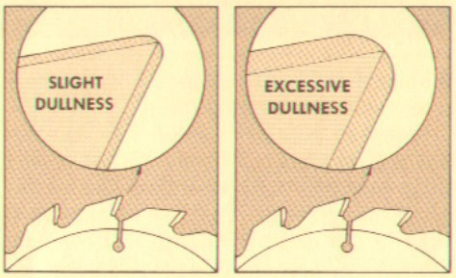

SHARPENING QUALITY. Carbide-tipped blades are usually resharpened on a machine that requires a skilled operator to perform all of the critical functions — manually. (Unlike steel blades, carbide-tipped blades can not be resharpened at home.) Manually operated machinery can produce a very high quality sharpening job or a very low quality job — the difference depends solely on the operator.

One of the major problems of sharpening a blade on a manually operated machine is keeping the heat build-up under control. Normally, heat control is accomplished by using only coarse grit diamond wheels. When finer grit wheels are used on manual machines, the limited amount of control the operator has is insufficient to prevent overheating. (Often a 180 grit wheel is the finest grit used on a manual type machine.)

There is also another type of machine — Vollmer is the brand name of one model — that's usually found only in saw blade manufacturing plants, and a few of the very largest sharpening shops. A Vollmer type machine can be pre-programmed to automatically grind the tips to the exact profile needed, perfect every time, without a chance of operator "error".

But the real beauty of these automatic machines is that they allow extremely fine diamond wheels to be used. They can use wheels up to 600 grit without overheating a tip because the precision tolerances of the machines are so high that they actually super-hone the tips rather than simply grind them. These machines also use a flood of coolant during the grinding process to help prevent overheating.

Note: Saw blades that have an ultra-sharp edge produced at the factory using an automatic machine must be resharpened on an automatic machine to re-produce the original edge.

One fairly accurate way to determine if a shop can sharpen a blade correctly is to check a sample of their work before turning over your blade for sharpening. This way, you can grade the results on someone else's blade, and not your own.

WHAT TO LOOK FOR. When inspecting a sample of a shop's work, there are several things to look for. First, examine the finish on the carbide tips. If a very fine diamond wheel was used, the finish should be shiny (almost mirror-like) and very smooth. If coarse grinding marks are visible, a fairly coarse diamond wheel was used, and most likely the edge produced cannot compare with the original factory finish.

Another important aspect is consistency from one tooth to the next. However, using the naked eye to detect any inconsistency in the shape of the profile from tooth to tooth is almost impossible. Luckily there is another area that can occasionally offer a clue to the overall quality of the sharpening.

GUMMING OUT. At least every third or fourth time a carbide-tipped blade is sharpened, the surface of the gullets, and the back side of the tooth should be lightly ground. Grinding these areas (called gumming out) relieves heat-induced stress built up on the surface of the steel.

Gumming out can help determine the quality of a sharpening job because it's easier to see inconsistencies in the shape of the gullets. Any variation in the shape of the gullets can be used as an indication of inferior sharpening. And in extreme cases, the gullets can even end up being square cornered as a result of improper gumming out. This creates a stress concentration which can, in some cases, cause the blade to crack.

To be sure that a blade is resharpened correctly, keep an eye on all of these quality check points. The end result is not only a blade that's kept sharp, but it also results in a blade that will last for many years.

Pin Router

AN ATTACHMENT FOR THE ROUTER TABLE

EDITOR'S NOTE. Last spring Carl Dykman (a woodworking teacher at a school for deaf and hard of hearing children in San Antonio, Texas) sent us a tip for a pin routing jig that he added to the *Woodsmith* router table. He built this new addition to the router table so his students could build and sell copies of projects.

Carl's tip started something. After we spent several hours discussing the theory of pin routing, we came up with two projects (shown in this issue) to test the practical side of this technique . . . and to try out the jig that makes it all happen.

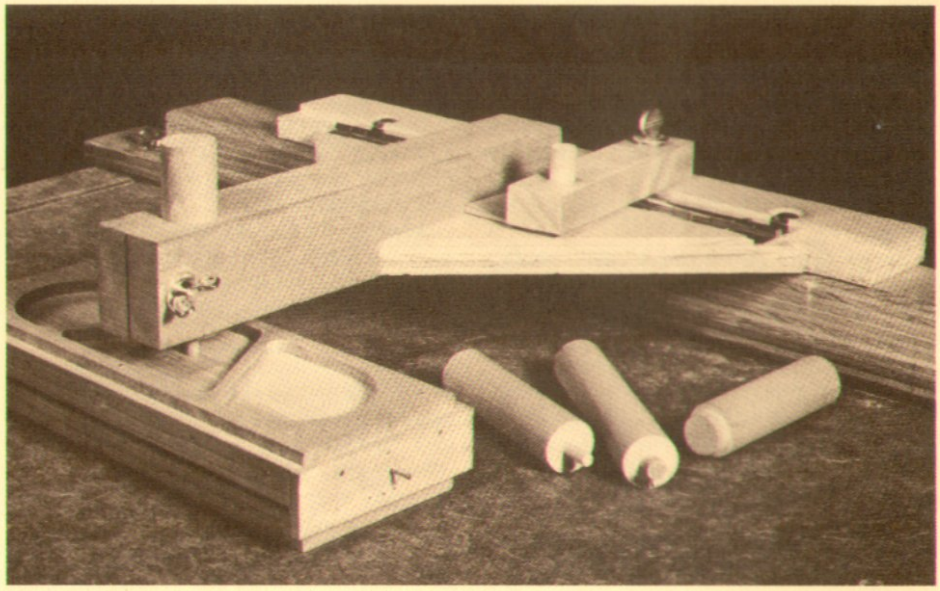

PIN ROUTING THEORY

Pin routing is a unique routing technique that's used when you want to make several identical copies of a specific pattern. What makes pin routing different from other types of routing is that it requires a special mechanical set-up.

FREEHAND ROUTING. When you're routing freehand, the router moves over the workpiece. To help control the router's path, its movement is limited in one of three ways: 1) a pilot is attached to the bit, 2) a fence is clamped to the workpiece, or 3) a template and bushing can be used.

ROUTER TABLE. On a router table, the router is held steady under the table, and the workpiece moved over the router. Again, a fence or a pilot on the bit may be used to control the cut.

PIN ROUTERS. Pin routers take a different approach. In their normal set-up, the router is mounted on an overhead arm that can be moved up and down so it engages and disengages the workpiece.

Then to rout a pattern, a template is attached to the bottom of the workpiece. The template, in turn, is placed over a stationary pin that's mounted to the table of the pin router. The pin serves as a guide for the template — just like the bushing attachments used for template routing.

This kind of pin routing could be described as "router over — pin under."

THE *WOODSMITH* VERSION. Carl Dykman's version of a pin router flipped things upside down so it could be used on the *Woodsmith* router table. Since the router is already mounted (upside down) on the router table, it was necessary to have the pin on top. Thus, this verson could be called "pin *over* — router *under*."

The biggest advantage to this adaptation is that it's very inexpensive to make. Instead of spending several hundred dollars for a pin router, the *Woodsmith* router table can be transformed into a pin router for less than $5. All you have to do is attach a movable arm to hold the pin.

Besides being inexpensive (almost down-right cheap) I think this set-up is a little easier to work with than the normal pin routing setup. The key advantage is that the router remains stationary and out of the way under the router table so there's little chance of bumping it out of position during the routing operation. Instead, the pin is conveniently moved out of the way when the workpiece has to be repositioned.

MOVABLE ARM

The key to this router table pin routing system is mounting the guide pin to a movable arm. However, in this case, the guide pin (and the arm that holds it) must be held very stable during the routing operation.

As the workpiece is routed, the sides of the template will be banging against the guide pin. If either the pin or the pin's support arm moves, there will be a "bump" in the routed pattern.

To eliminate any movement, the guide pin is clamped in a thick support arm. Then the support arm is mounted to a triangular support piece that holds it steady. And finally the triangular support is hinged on a fixed plate so it can be flipped up out of the way.

CONSTRUCTION. There are three main parts for this set-up: a fixed plate (A), the triangular support (B) and the pin support arm (C). To start construction, cut the fixed plate from a piece of ¾" plywood.

THE FIXED PLATE. The fixed plate (A) is sized to fit on the top of the router table's fence — 16" long and equal to the width of the fence (2¼" on our router table).

Then this plate is bolted to the fence with hex head bolts. But in order to make it easy to remove, I screwed the bolts into rosan inserts, see Fig. 2.

To mount the plate to the fence, drill ¾" counterbore holes deep enough to accept the head of the bolt and a washer; and follow with ¼" holes for the bolts.

Then mark the position of these two holes on the top of the fence, and drill ⅜" holes in the fence for the rosan inserts. (A ¼" rosan insert requires a ⅜" hole.)

TRIANGULAR SUPPORT. Before attaching the fixed plate to the fence, go ahead and make the triangular support (B). To make this support, cut a piece of ¾" plywood 13½" long and 6" wide, and miter both ends at 45°. When these miters are cut, they won't meet at the center — there will be a 1½" stub "point" where the pin support arm will be attached, see Fig. 1.

RABBET FOR HINGE. Later, the triangular support will be joined to the fixed plate with 1½"-wide piano hinge, see Fig. 2. To keep this hinge out of the way of the hold-down lever (that's attached later), rout a shallow rabbet in both the plate and triangular support. (The width and depth of the rabbet is cut to match the size of the hinge you use.)

THE PIN SUPPORT ARM

Next, the pin support arm (C) can be cut to size and attached to the triangular support. The maximum size of project that can

be made on this pin router is determined by the distance between the guide pin (at the end of the pin arm) and the router table fence. So, the longer the pin arm, the better.

To find the maximum length for the pin arm, move the fence back as far as it will go on the router table. Then measure the distance from the fence to the router bit, and add ¼". This is the length of the pin support arm (C). (It turned out to be 11" in our case). This length also allows an extra ½" for adjusting the jig over the bit.

To make the pin arm, rip a 2"-wide stick from a piece of scrap 2x4. Then cut a ¾"-deep, 5¼"-long notch at one end to fit over the triangular support, see Fig. 1.

HOLE FOR GUIDE PIN. Before the pin arm is attached to the triangular support, drill a 1"-diameter hole for the guide pin, centering this hole 1½" from the front end of the pin arm, see Fig. 3. Note: This hole is drilled through the 2" thickness of the arm to give the pin as much support as possible. It's best to use a drill press here so the hole is exactly perpendicular to the router table.

CLAMPING BOLT. To hold the guide pin tightly in this hole, I added a clamping bolt at the end of the pin arm.

First, drill a ¼" hole (horizontally) through the pin arm, centering this hole ½" from the front end of the arm. Then cut a kerf from the end of the pin arm into the 1"-diameter hole (the one for the guide pin), see Fig. 3. To clamp the pin in place, use a carriage bolt, washer, and wing nut to pinch the two sides of the arm around the guide pin.

ASSEMBLY. Finally, the pin arm can be glued and screwed to the triangular support, countersinking the screws through the bottom of the triangular support. Then install the piano hinge in the rabbets to join the triangular support to the fixed plate.

HOLD DOWN

When this assembly is attached to the router fence, you have a basic "pin over — router under" pin router. However, when I first used it, I noticed the pin arm had a tendency to lift up and out of the template . . . letting the bit run amuck, ruining the workpiece.

HOLD DOWN. To hold the pin arm in position while routing, I needed three hands, or a full-time assistant. Since getting good help is next to impossible, I added the next best thing: a small hold-down lever with a ½" dowel at one end to use as a handle for moving the lever back and forth, see Fig. 4.

To attach this lever to the fixed plate, drill a ⅜" hole in the plate (A) for a rosan insert. Then use a thumbscrew, washer and lock washer to hold the lever in place. Also, to compensate for any "play" in the hinge and keep the pin arm firmly on the

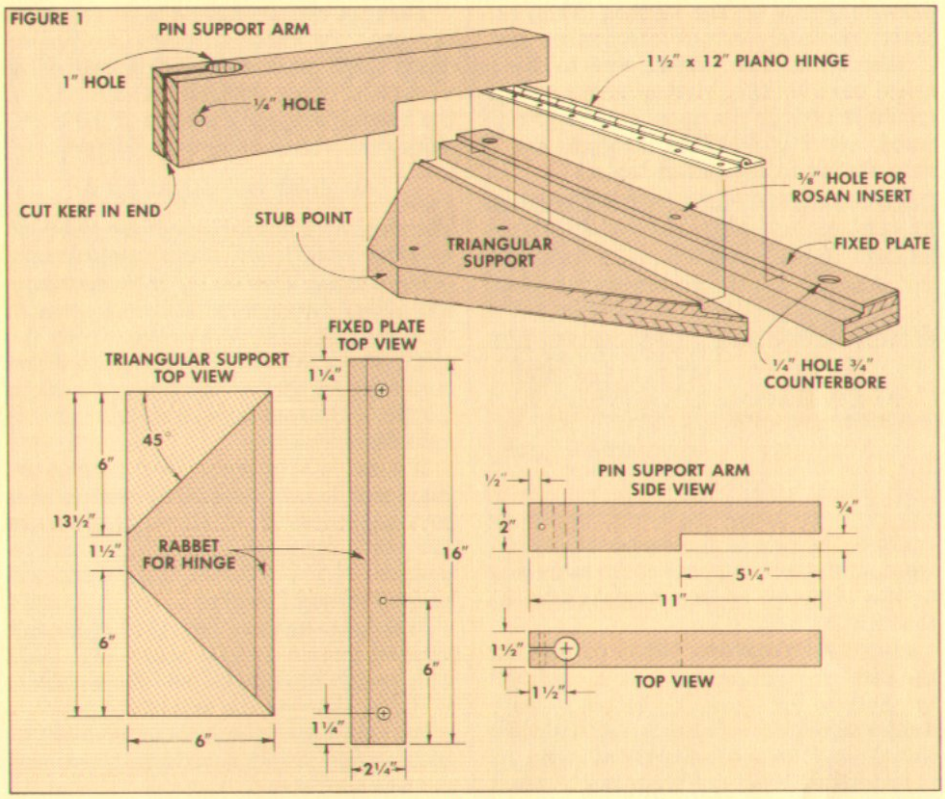

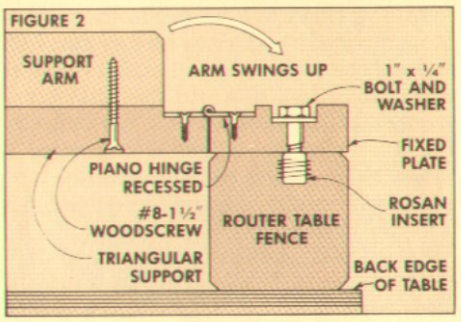

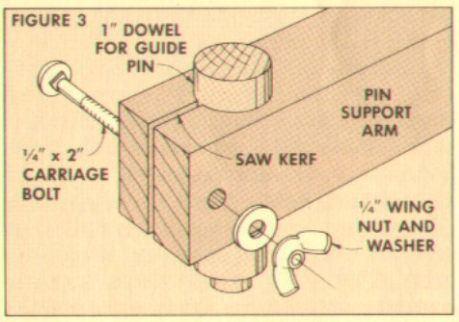

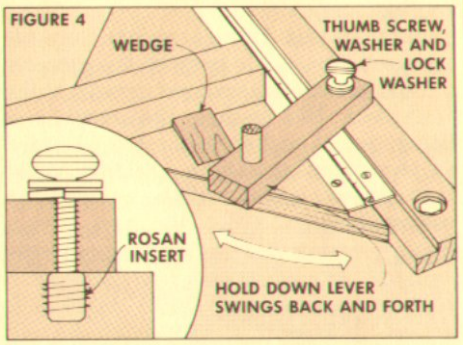

template, glue a tapered shim to the top of the triangular support.

ATTACHING THE JIG. This completes the movable pin arm attachment. It can be mounted to the fence of the router table with two ¼" hex head bolts and washers.

MAKING THE TEMPLATE

In order to use a pin router, a template must be mounted to the workpiece to guide it over the router bit. The only problem is finding a material for the template that's sturdy enough to withstand repeated use, yet is easy to work into the desired shape with normal shop tools.

The template has to be sturdy because during the routing process, the edges of the template are constantly bumping against the guide pin. Also, if there are thin walls on the pattern (to divide one compartment from another), they must be kept steady so they don't wobble back and forth when the pin moves against them. (This movement will be reproduced, and even magnified, in the finished product.)

MATERIAL. I chose ¼" tempered Masonite for the templates used to make the two projects shown in this issue. It's easy to work with, and holds up fine if relatively few projects are routed. However, Plexiglas could be used if you're thinking about making dozens of copies of a project.

CUTTING THE PATTERN. When you're ready to draw the pattern, cut the template slightly larger than the size of the pattern so the project can be custom trimmed to final size after routing.

One nice thing about using Masonite for the template is that the pattern can be

drawn directly on the surface. Then the pattern is simply cut out with a sabre saw.

Shop Note: The easiest way to use a sabre saw for this kind of cutting is to mount it up-side down on a piece of plywood, see Fig. 5. (This arrangement is very similar to the router table.)

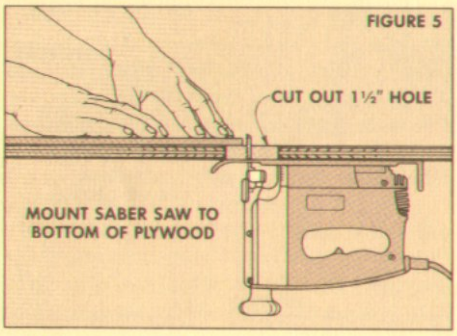

FIGURE 5

Cut a 1½" hole in the center of the plywood, and screw the base of the sabre saw to the plywood so the blade sticks up through the hole.

CHECK SMOOTHNESS. When cutting out the pattern with the sabre saw, don't get too close to the lines. It's better to leave some space and then use a file to smooth the edges of the template to final shape. As the edges are filed, get them as smooth as possible — any irregularities will be transferred to the workpiece.

To check the smoothness of the template, place it on a piece of paper and trace the outline with a sharp pencil. It's a lot easier to see bad spots on the traced outline than on the template itself.

TEMPLATE BASE. When the template is filed smooth, glue it to a piece of plywood and tack small brads along any thin divider arms. This will give the whole template more support so it doesn't bend during the routing operation.

HOLDING BOX. If the template were being used to cut one copy of the pattern, it could be nailed or screwed directly to the workpiece. But because the template is being used to rout several copies, I added ¼" plywood sides to form a holding box so that each workpiece could be inserted and removed easily.

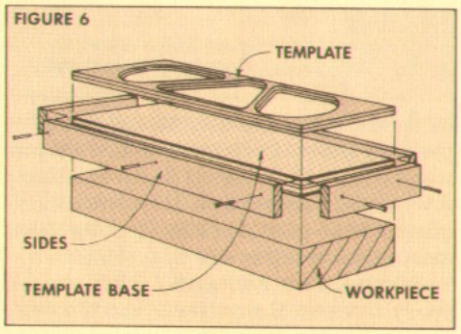

FIGURE 6

To form this box, cut four strips of ¼" plywood for the sides and glue and tack them flush with the top of the template, see Fig. 6.

Then cut the workpiece to fit snugly in the box. To make sure the workpiece doesn't shift position during routing, drive a couple of brads through the side walls of the holding box into a section of the workpiece that will be trimmed off later.

MAKING THE GUIDE PINS

The only thing left to make is the guide pin — which is the key to the whole technique of pin routing. The beauty of pin routing is the ability to combine different sizes of pins and router bits to achieve exactly the effect you want. But this means that you may have to change the pin right in the middle of the routing operation. And that presents problems.

In order to have the ability to change the guide pin, it must work off the same center point as the router bit. This way, when one size pin is centered over a bit, it can be replaced with a different size pin and still be centered on the bit.

In order to achieve this, Carl Dykman's tip used threaded metal collars that could be screwed onto a metal pin. These collars, in effect, changed the size of the pin.

But this means you have to have metal-working equipment to machine the collars and thread them.

WOODEN PINS. We decided to change this around a little by using wooden pins. To make these pins, I started with a 1" dowel and cut the end down to the diameter I wanted for the pin. This sounds difficult, but it's really just a matter of cutting a round tenon on the end of the dowel.

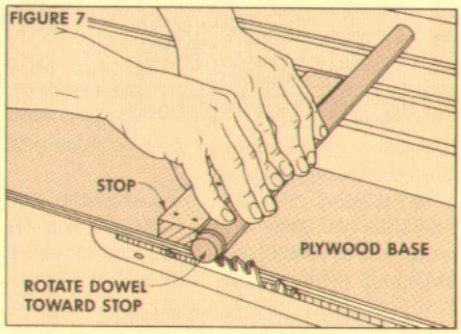

FIGURE 7

CUTTING JIG. To do this, all you need is a holding jig for the dowel, see Fig. 7. This jig consists of a stop tacked to a plywood base. Then the base is clamped so the stop is perpendicular to the saw blade.

To make the round tenon (pin), hold the dowel against the stop. Then turn on the saw and gradually raise the blade until it cuts into the dowel about ⅛". (A rip blade works best for this cut.) Slowly rotate the dowel to "turn" the diameter of the dowel to the size you need.

As the dowel is being rotated, push it back and forth so the pin is cut to a length of about ⅜". (This length will keep the shoulder of the dowel above the surface of the ¼"-thick template.)

CHECK SIZE. To check the size of the pin, drill a "fitting" hole in a piece of scrap wood. As the diameter of the pin reaches the right size, test it in the fitting hole.

You can make several sizes of pins this way, and each one will be exactly centered on the 1" dowel. (Which means they're all interchangeable in the pin arm.)

SETTING UP THE PIN ROUTER

At this point all of the mechanical parts of the pin router are ready. The only thing that remains is to clamp the guide pin in the pin support arm and make adjustments so the pin is centered over the router bit.

SET-UP PIN. To center the pin on the router bit, I use a ¼"-diameter "set-up" pin. Insert this pin in the pin arm and adjust the fence so the pin fits into the collet of the router, see Fig. 8.

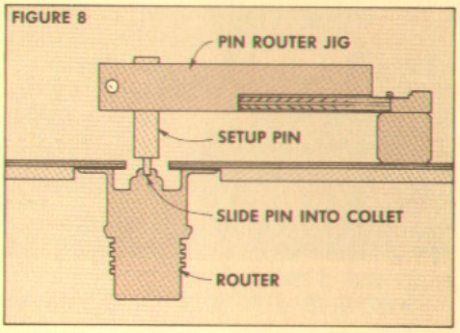

FIGURE 8

(Once the set-up pin is centered, any other pin that's placed in the support arm will automatically be centered on any size router bit.)

As the pin is centered on the collet, make sure the support arm (C) is exactly parallel to the router table. (Measure the height of the support arm at the fence and out at the end of the arm. These two measurements should be equal.) When the set-up pin is centered on the router's collet, use C-clamps to clamp the fence tightly on the router table.

Then replace the set-up pin with the pin that will be used to rout the workpiece. And place the template box (with the workpiece) under the pin. Once again, make sure the support arm is parallel to the router table by adjusting the height of the pin as it rests on the template. Then set the height (depth of cut) of the router bit, and you're ready to rout.

ROUTER TABLE PLANS

This pin routing set-up is designed for the *Woodsmith* Router Table. The plans for the bench-top version of this router table appeared in *Woodsmith* No. 20, and the plans for adding legs and a storage box to make it a free-standing floor model appeared in *Woodsmith* No. 22.

However, we also have a 6-page plan booklet that shows how to build both models. If you would like these plans, send $1 to *Woodsmith*. We'll be happy to send them to you.

Talking Shop

AN OPEN FORUM FOR QUESTIONS AND COMMENTS

PLUNGE ROUTERS

I'm ready to purchase a router to use on my just completed Woodsmith *router table (*Woodsmith *No. 20), but I can't decide which type of router to purchase. I've seen advertisements for plunge routers, but I don't know how they differ from a standard router, or how they're used. Any information you can provide would be appreciated.*

Larry Grove
Runnels, Iowa

Plunge routers differ from the common stationary routers in two ways. The most important difference is that on a plunge router the router bit can be lowered (plunged) straight down into the workpiece while the router is operating simply by exerting downward pressure on the handles. In order to do this, the router motor (and the bit) are mounted on spring loaded guide bars. Once the plunge cut is made, the motor (and bit) can be locked to a pre-set depth of cut and routing would continue as usual.

The other major difference between the two styles of routers is the size of the motor they use. Rather than using ¾ to 1½ horsepower motors found on most standard routers, plunge routers are equipped with motors in the 2 to 3 horsepower range to handle the long term use associated with industrial applications.

I don't know of any applications in a home shop that can justify the cost of a plunge router ($200-300). In fact, most applications can be duplicated either using a standard (and less expensive) router, or other common shop tools.

For instance, plunge routers are often used to rout slot mortises. But a perfectly good mortise can also be made using a standard router and a jig as shown in *Woodsmith* No. 26, or better yet, using a drill press as shown in the same issue.

One other aspect of plunge routers should be mentioned — their weight. Most of them weigh between 10 and 15 pounds, compared to 5 to 10 pounds for standard routers, which is probably too much weight for the top of the router table (shown in *Woodsmith* No. 20) to support.

NOISY SAW BLADES

I have a problem that you did not mention in your article on carbide-tipped saw blades. The noise level of my 10", 60-tooth carbide-tipped blade is so high that it hurts my ears.

I've been told that the noise level can be lowered by silver soldering shut the little round holes at the base of the expansion slots. I question the wisdom of doing this. What do you think, is this a good idea?

R. Lehmann
Wausau, Wisconsin

In the article on carbide-tipped saw blades in *Woodsmith* No. 27, noisy saw blades were not specifically addressed because all the blades we tested fell within a reasonable noise range. However, there are some carbide-tipped saw blades that do exceed reasonable noise levels.

Buying a noisy blade — unintentionally — is one of the easiest things to do. The problem is that most retailers don't have the time, equipment, or the inclination to "demonstrate" blades for performance, let alone for noise level. So you usually don't know the noise level of a particular blade before you become its new owner.

Unfortunately, if you buy a noisy blade, you'll probably have to live with it and buy a good pair of ear protectors.

However, there is a natural inclination to try to perform one of several homemade fixes on the noisy blade. These quick fixes are not only ineffective, but they can be extremely dangerous.

Your questions on the safety of filling the expansion slots with solder and filing them flush is a good example of an "extremely dangerous" *home* remedy. And the answer is ABSOLUTELY NOT!!!

Under no circumstances should you alter a carbide-tipped blade in any way.

Carbide-tipped blades cannot be altered because they're manufactured to such exacting specifications (such as runout tolerances to within .003"). Any attempt to alter the blade, no matter how careful the effort, would end up being a disaster that would, without doubt, ruin the blade.

But even worse than ruining a blade is the fact that any altering will throw the blade way out of balance. And the result of this imbalance could very well be disaster for the operator.

SPALTED WOOD

Although I've often heard of "spalted" maple, I've never seen anything describing what exactly it is, and how it's created. Can you describe it?

John Schantz
Allentown, Pennsylvania

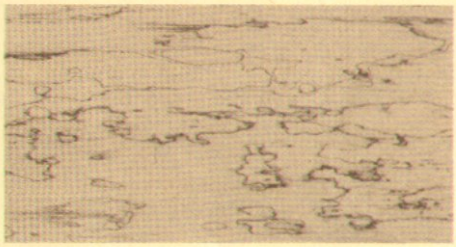

Spalted is a term used to describe wood in the process of decay, characterized by dark brown or black stain lines running randomly throughout the wood. Bruce Hoadley calls these lines "zone" lines in his book "Understanding Wood" (available from Taunton Press, 52 Church Hill Rd., Box 355, Newtown, CT 06470, $20.00). Zone lines (spalting) result when certain conditions are present during the decaying process of some woods.

Although the zone lines technically distinguish varying degrees of decay and hardness in a piece of wood — from normally hard to very soft — they also create very beautiful and creative patterns.

Although spalting can occur in many woods given the right set of circumstances (the wood in the photo is spalted banak, a mahogany substitute), few show the contrast between the zone lines and the wood itself as well as maple. This is one reason why spalted maple is the most commonly used species of spalted wood.

Unfortunately, spalting is usually considered a defect. That's why it's rarely available from conventional lumber sources. But spalted wood can sometimes be obtained by checking with local lumber mills. When they come across spalted lumber, they usually throw it into the scrap heap, and price it accordingly.

Sources

WOODWORKING CLUBS

Our list of woodworking clubs continues to grow, and the offer still stands to help publicize your clubs. Just write to Steve Krohmer, % *Woodsmith*, 1912 Grand Avenue, Des Moines, Iowa 50309.

TWIN TIERS WOODCRAFTER'S GUILD. This is a relatively new club which meets the second Monday of every month in Vestal, New York. The club draws members from the area surrounding Binghamton, NY and now has about 45 members.

Perry Baumlin, the Guild's Secretary-Treasurer would like to receive any material that he could use to plan future meetings. Write to him at 121 Kimble Road, Vestal, NY 13850.

KISHWAUKEE WOODWORKERS. Doug Hicks of the Kishwaukee Woodworkers in Dekalb, Illinois says that, in addition to the group's monthly meetings, they provide scholarships for high school students, repair wooden toys for area schools, and produce wooden toys for distribution to low income children at Christmas.

The group meets the third Thursday of each month and if you'd like more information, contact Doug Hicks, 420 Oak Street, Dekalb, Illinois 60115.

CENTRAL FLORIDA WOODWORKERS GUILD. R. W. Eaton says this guild is open to all interested woodworkers in Central Forida. For more information, write to the guild in care of Box 4321, Winter Park, Florida 32793, or call 305-678-3164.

MID-IOWA WOODWORKERS. This group is headquartered in Newton, Iowa, but attracts members from several neighboring counties. They've been meeting every third Tuesday for the past couple of years.

As part of their regular meetings, they feature programs presented by area craftsmen including one by woodworkers from the Amana Colonies. For more information, contact Ron Toppenberg, Chairman, 713 East 5th Street, Newton, Iowa 50208, or call 515-792-5181.

SANTA CRUZ WOODWORKERS ASSOCIATION. This organization meets the second Monday of the month at a local hardwood store, and the meetings are open to all interested woodworkers. For more information, contact Treasurer Gary Benaquisto, 565 7th Avenue, Santa Cruz, CA 95063, or call 408-476-9030.

SAN JOAQUIN FINE WOODWORKERS ASSOCIATION. We mentioned this group in the last issue — but there was an error in the address. The *correct* address for President Mark R. Webster is 670 North G. Street, Porterville, California 93257. The telephone number is 209-781-4074, and Mark tells us they've even got their own mailing address: PO Box 789, Porterville, California 93258-0789.

INLAYS

Marquetry inlays for projects in this issue are available from several sources. Because there are so many designs and sizes, we can't provide specific ordering information about all that are available.

Each of the inlay suppliers sells a catalog with color photographs of their inlays. The selection in all three of the following catalogs is pretty much the same, although Constantine generally offers more than either of the other two sources.

Each of the catalogs costs $1.00, and when ordering, be sure to request the 1983 edition.

Constantine
2050 Eastchester Road
Bronx, NY 10461

The Woodworkers' Store
21801 Industrial Blvd.
Rogers, MN 55374

Craftsman, Department 10
1735 West Courtland Court
Addison, IL 60101

MARQUETRY

If you'd like to know more about marquetry — how the decorative inserts and banding strips are made, and some of the history of the technique — several back issues of *Fine Woodworking* magazine are worth purchasing.

Issues 1, 2, 16 and 27 contain information about marquetry. Back issues of *Fine Woodworking* are available ($3.00 each) from The Taunton Press, 52 Church Hill Road, Box 355, Newton, CT 06470.

SPRAY ADHESIVES

Whenever we have to temporarily "glue" a piece of paper (for instance, the routed tray's template pattern or the pattern for the marquetry inlay) to something, we use Scotch brand Spray Mount Artist's Adhesive (Cat. No 6065). The adhesive comes in an aerosol can, is easily applied, and is not so sticky that the paper can't be picked up and repositioned. Spray Mount is available at most artist's supply stores.

A similar product, Photo Mount, is used to spray-mount photographs in albums, and it's available at photography stores.

THREADED INSERTS

The threaded ("rosan") inserts used in the construction of the pin router jig in this issue may be available at a local hardware store, but if you can't find them, you can buy them from:

Woodcraft Supply Corporation
41 Atlantic Avenue
Woburn, MA 01888
Telephone: 1-800-225-1153

By ordering part number 12K51-FT, you'll get a package of 25 inserts which are ½" long, require a ⅜" pilot hole, and accept a 1/4-20 threaded bolt. Price per 25 is $9.95

The inserts may also be ordered from The Woodworkers' Store (Part #D3960-1/4-20) for $.28 apiece ($22.00 per 100).

MUSICAL MOVEMENTS

A number of sources supply small music box movements. And it's a good idea to order the movement first because the start/stop mechanisms vary from one manufacturer to another. The size of the movement will also vary depending on the number of notes and tunes the movement plays.

The works we selected for the music box in this issue is a two tune, 36-note movement purchased from Klockit ($17.95 plus shipping and handling charges). The start-stop mechanism must be ordered separately.

Klockit
PO Box 629
Highway H, North
Lake Geneva, WI 53147
Telephone: 414-248-1150

A limited selection of 18 note movements is available from the Woodworkers' Store. A much wider selection is available from:

Craft Products Company
2200 Dean Street
St. Charles, Illinois 60174
Telephone: 312-584-9600

SALAD BOWL FINISH

Because the routed snack trays are designed to contain food, we finished them with Behlen's Salad Bowl Finish. This finish, when dry, is non-toxic and it contains only ingredients approved by the U.S. Food and Drug Administration. Behlen's Salad Bowl Finish is available from:

Wood Finishing Supply Company
1267 Mary Drive
Macedon, New York 14502
Telephone: 315-986-4517

Pint	*$5.32*	*B603-00015*
Quart	*$9.03*	*B603-00016*
Gallon	*$27.09*	*B603-00017*

Include $2.00 for shipping charges for the pint or quart; $4.10 for the gallons.